75 cents

hr

focus
on
communications
technology . . .

ham radio magazine

OCTOBER 1969

HOT CARRIER DIODES

2-meter converter
product detector
noise blanker

this month

- low-cost linear integrated circuits 20
- diversity antennas 28
- solid-state 432-MHz exciter 38
- tropospheric-duct communications 68

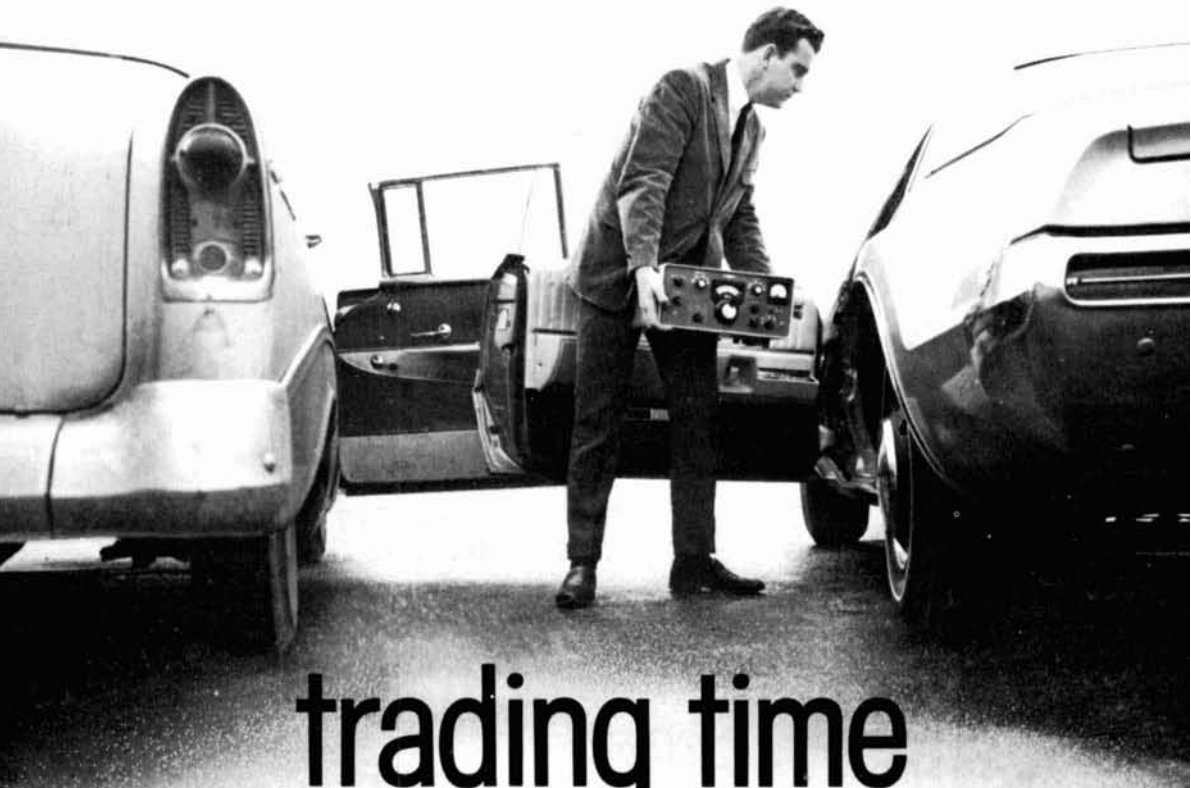

trading time

...but not for the KWM-2

At 100,000 miles, it's still the liveliest rig on the road.

COLLINS

No tetrodes with higher linearity.

In the power tetrode field we're defining the state of the art by demonstrating intermodulation distortion better than any other known tubes. In 1966 we introduced the 4CX1500B, a 1.5 kW tetrode with the highest linearity then known: better than −40 dB 3rd order IM distortion. Since then we produced the 4CX600J, a 600 watt tube with −45 dB 3rd order IM products—without feedback—and later a 5 kW tetrode with the same figure. Now the latest tetrode in our program, a 15 kW tube, exhibits −40 dB 3rd order IM products. We can show IM distortion improvements from 10 to 20 dB in a practical quiescent plate current range.

Other tetrodes now under development will deliver up to 40 kW with linearity as high as −45 dB IMD, according to preliminary data. Such performance advances are part of a long range program employing computer-assisted design studies to optimize internal tube geometry—all part of our plan to insure you get state of the art products every time you buy from Eimac.

Eimac® division of varian

Contact your nearest Varian/Eimac distributor or ask Information Operator for Varian Electron Tube and Device Group.

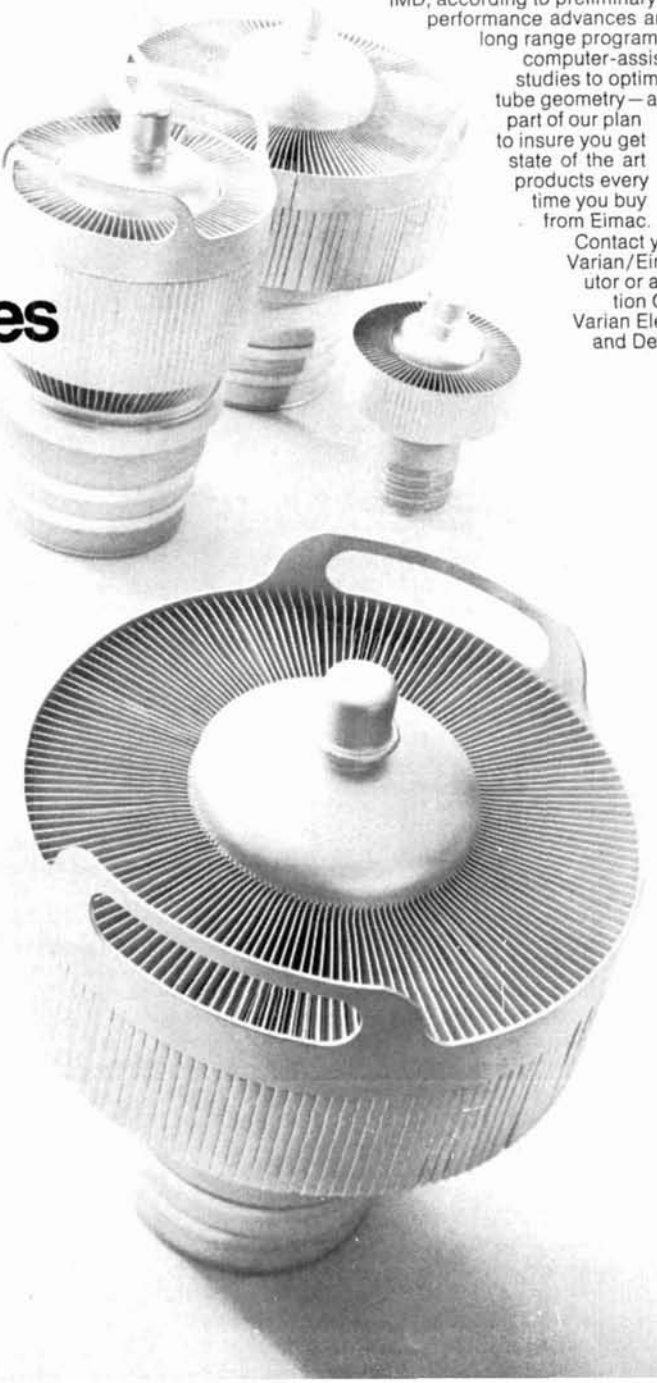

DRAKE — Equipment for RADIO AMATEURS

DRAKE FINEST 4 LINE

R-4B Receiver

• Permeability-tuned VFO reads to 1 kHz • Crystals cover all of 80, 40, 20, 15 mtrs. and part of 10 • Ten 500 kHz accessory ranges (1.5-30 MHZ) • Four bandwidths • Passband tuning • Noise Blanker on CW-SSB-AM, Notch Filter, Xtal Cal

Amateur Net **$430.00**

T-4XB Transmitter

Frequency coverage and VFO similar to R-4B • USB/LSB • Semi break-in CW • Controlled Carrier AM • VOX or PTT • Adjustable Pi-Net • Xmit AGC, no flat topping • 200 watts • 8 pole SB Filters

$449.00

Transceive with R-4B or T-4XB VFO or use separately.

L-4B Linear Amplifier

• 2000W PEP-SSB, 1000W AM, CW, RTTY • Class B Gnd Grid • Broad Band Tuned Input • RF Neg Feedback • Xmit AGC • Directional Wattmeter • Taut-band Meters • Plate Current Meter meets FCC reg • Quiet hi-volume blower.

Amateur Net **$750.00** Incl. sep. sol-st. Power Supply

DRAKE 4 LINE ACCESSORIES

MN-4 MN-2000

Matching Networks

Integral Wattmeter: fwd pwr in watts and VSWR direct • Can read refl pwr • Matches xmtr to ant VSWR 5:1

MN-4 200 watts ..... **$ 90.00**
MN-2000 2000 watts PEP **$175.00**

RF Wattmeters

W-4 WV-4

Fwd and refl pwr directly in watts • Two scales each direction • Calib Acc: ±(5% of reading + 1% of full scale)

Model	Range	Full Scale	Price
W-4	1.8-54 MHz	200/2000W	$49.50
WV-4	20-200 MHz	100/1000W	$73.50

Matching Speaker MS-4

5"x7" speaker, space for power supply **$19.95**

Cardioid Mike

60-8000 Hz, ceramic, Hi-Z, highly directional, plug . . .
Model 729-SRD **$17.00**
Standard Crystals, ea **$ 5.00**
Power Supply **AC-4**.... **$99.95**

DRAKE TVI FILTERS

HP FMS

LP LN

TV-300-HP High Pass Filter.... **$ 4.50**
TV-1000-LP Low Pass Filter **16.95**
TV-100-LP Low Pass Filter..... **5.95**
TV-CB-LP Citizens Band **6.95**
TV-300-FMS FM Band Stop **4.50**
TV-300-FMI FM Tuneable **4.50**
LN-4 Power Line Filter **7.30**

T-4B Transmitter • Like T-4XB except use with R-4B in Xcv mode or from 10 accessory crystals • Built-in speaker for R-4B **$395.00**
TR-44B Communications Station • Consists of R-4B and T-4B in same cabinet • Less power supply and crystals **$850.00**

DRAKE SIDEBAND TRANSCEIVERS

TR-4 & TR-6

BOTH have Linear VFO, 1 kHz acc, 300W PEP-SSB, Semi Break-in CW with Sidetone, VOX or PTT, Adjustable Pi-net, Plate and AGC Mtrs.

TR-4 covers 10-80 meters; USB/LSB, CW, AM; **TR-6** tunes 6M plus MARS with 9 xtals (2 furn), USB-CW-AM.

TR-4 OR TR-6 **$599.95**

RECEIVERS: Sensitivity for 10 dB S/N: **TR-4** .5 µV, **TR-6** .1 µV (FET front end) **Selectivity: Both** 2.1 kHz @ 6 dB, **TR-4** 3.6 kHz @ 60 dB. **BOTH** have diode & prod detectors, S-meter.

RV-4 & RV-6 REMOTE VFO's

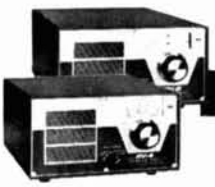

Permit rcvg, xmtg or xcvg on separate freq in same range as transceiver.

RV-4 OR RV-6 **$99.95**

TRANSCEIVER ACCESSORIES

MMK-3 Mobile Mounting Kit **$ 6.96**
Power Supplies: **AC-4** ..... **$ 99.95**
DC-4 ..... **$125.00**
DC-24 ..... **$210.00**
MS-4 Matching Speaker ..... **$ 19.95**
FF-1 Fixed Freq. Adapter ..... **$ 24.50**
MC-4 Mobile Spkr/Wattmeter **$ 69.00**
34-NB Noise Blanker Kit for TR-4 ..... **$129.00**

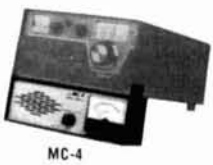

MC-4

HAMS SAY . . . ***"Best Receiver buy since the 2-B"***

2-C Receiver

• Xtal control 1st converter • 500 kHz Ranges: 80, 40, 20, 15, 10 meters • Accessory Ranges 3-30 MHz • SSB-AM-CW • Accessories: Spkr, Q-Mult, Calib, Noise Blanker, Xtals.

Amateur Net **$229.00**

CW Transmitter 2-NT

• 100 (or 75) watts • Break-in CW with 2-C • 80, 40, 20, 15, 10 mtrs xtal controlled • Ant. Relay • Sidetone • LP Filter • Pwr. Sup. incl.

Amateur Net **$149.00**

DRAKE 2 and 6 Meter CONVERTERS

For Receivers

FET, Lo Noise, Uniform Gain, Low Spurious Response
6 meters—**SC-6**.....**$64.50**
2 meters—**SC-2** **$69.00**
Power Supply **CPS-1 $17.95**
VHF Xtal Cal **SCC-1 $24.50**
Console **CC-1 $24.50**

Transmitting Converters

TC-2 • Entire 2-meter band • 180 watt input
TC-6 • All of 6-meter band • 300 watt input
BOTH: • Xmit AGC—no flat top • Antenna Relay • Need no separate pwr supply with Drake xmtrs. **TC-2 $300.00; TC-6 $250.00**

SPR-4 PROGRAMABLE RECEIVER • All solid state • 1 kHz acc. dial • 3 bandwidths • SSB-AM-CW • 24 500 kHz ranges 150 kHz-30 MHz (10 ranges furn., others $5 ea.) • 12 VDC/120 VAC • Acces avail: Calib, Noise Blanker, Notch. **$350.00**

. . . at your distributor or write:

Dept. 409 · R. L. DRAKE COMPANY · 540 Richard St., Miamisburg, Ohio 45342

ham radio magazine

october 1969

volume 2, number 10

staff

editor
James R. Fisk, W1DTY

vhf editor
Nicholas D. Skeer, K1PSR

fm editor
J. Jay O'Brien, W6GDO

associate editors
A. Norman Into, Jr., W1CCZ
Alfred Wilson, W6NIF
James A. Harvey, WA6IAK

art director
Jean Frey

publisher
T. H. Tenney, Jr. W1NLB

offices

Greenville, New Hampshire 03048
Telephone: 603-878-1441

ham radio magazine is published monthly by Communications Technology, Inc., Greenville, New Hampshire 03048. Subscription rates, world wide: one year, $6.00, three years, $12.00. Second class postage paid at Greenville, N.H. 03048 and at additional mailing offices.

Copyright 1969 © by Communications Technology, Inc. Title registered at U. S. Patent Office. Printed by Capital City Press, Inc. in Montpelier, Vermont 05602, U.S.A.

Microfilm copies of current and back issues are available from University Microfilms, 313 N. First Street, Ann Arbor, Michigan 48103.

Postmaster: Please send form 3579 to **ham radio** magazine, Greenville, New Hampshire 03048.

contents

6 **hot-carrier diode converter for two meters**
Gary A. Vander Haagen, K8CJU

12 **hot-carrier diode product detector**
Michael J. Goldstein, VE3GFN

16 **hot-carrier diode noise blanker**
Ralph W. Campbell, W4KAE

20 **new low-cost linear integrated circuits**
Paul O. Franson, WA7KRE

24 **improving the fm repeater transmitter**
J. Jay O'Brien, W6GDO

28 **high-frequency diversity antennas**
George A. H. Bonadio, W2WLR

38 **solid-state 432-MHz exciter**
Henry H. Cross, W1OOP

44 **radio-communications links**
James E. Ashe, W1EZT

52 **automatic vhf beacon**
Robert B. Cooper, Jr., K6EDX

58 **voltage-controlled crystal oscillator**
Peter Laakmann, WB6IOM

62 **ssb transmitter alignment**
Larry Allen

68 **tropospheric-duct vhf communications**
Victor R. Frank, WB6KAP

departments

4 a second look
96 advertisers index
78 comments
81 flea market
72 ham notebook
76 new products
62 repair bench

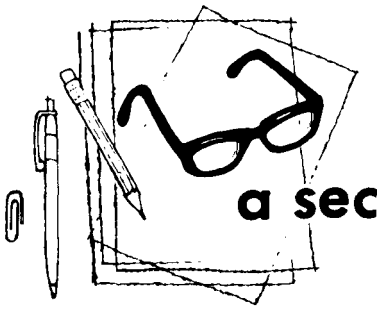

a second look

by jim fisk

During disastrous hurricane Camille along the Gulf Coast, and the terrible flooding in Virginia, amateur radio was once again called upon to provide communications in and out of the stricken areas. Most of the emergency communications from Mississippi were handled on the high-frequency bands, while two-meter fm was used in Virginia.

The many fm repeaters around the country are ideal for emergency work since they provide dependable long-range communications with low-powered battery-operated transmitters. The Lynchburg, Virginia, repeater, WB4HCX, was tied in with the communications control station K4KJN, and handled communications with the isolated disaster areas. At one point W4GCE's remote-control station was placed into service to handle the heavy load of traffic. After approximately 100 hours of continuous operation, minimum telephone service was restored, and K4KJN, repeater WB4HCX and remote-station W4GCE ceased emergency operation.

Two-meter fm has an additional advantage during an emergency—the communications-control station can exercise better control over the situation. When operations shift to the high-frequency bands, communications are hindered by the many stations who are "standing by" to help. If the stations standing by would do more listening and less transmitting, operations would be speeded immensely. Also, during the recent crisis, there was all too much idle chatter on the emergency channel. Several times emergency and medical traffic was held up while stations broadcast various "announcements" and news reports to the waiting multitude.

The next time you hear an emergency frequency in operation, don't jump in with both feet and announce that you are "standing by" to help unless you're asked to do so. If the net-control station is looking for a station to accept traffic to your vicinity, **that** is your cue to turn on your transmitter. Remember too that amateur stations in the stricken area will seldom handle incoming traffic because they have no way to get it to the addressee.

catalog time

If your mailbox is anything like mine, it's been overloaded of late with new catalogs from all the big electronics distributors. First on the scene was the new 1970 number from Allied Radio, followed closely by volumes from Burstein-Applebee and Lafayette Radio Electronics. The new 1970 Radio Shack catalog is out too, but for that one you have to personally call at your local Radio Shack outlet.

If you do any building at all, you owe it to yourself to have these catalogs in your shack. If you're not already on your favorite distributor's mailing list you probably didn't buy any components during the past year or so, but a post-card request will usually bring a copy of his latest catalog *tout de suite*.

Jim Fisk, W1DTY
editor

NOW ON AT YOUR DEALERS –

GALAXY ANNIVERSARY SPECIAL!

Buy your new GT-550 before November 1st–

Get the $29.95 VOX ACCESSORY FREE!

● You've heard about this fabulous Galaxy GT-550...maybe you've even had an opportunity to sit down and try one at your Dealer's or a fellow Ham's place. Sooner or later you figure you're going to own one–well, *NOW's* the time! During the month of October all Galaxy Dealers are giving away a VOX Accessory with every GT-550 sold. But if you're going to get one–act now, your order has to be in before November 1st, 1969!

Your Bonus Gift for buying in the Month of October!

VOX ACCESSORY - VOX35C

Completely solid-state and instant plug-in (internally) on the GT-550 chassis. Three controls allow full-range settings for "vox gain", "anti-vox gain" and "time" delay. Controls may be adjusted from outside cabinet. Regularly sells for $29.95.

OFFER GOOD AT ALL GALAXY DEALERS

hot-carrier diode converter for two meters

Hot-carrier diodes simplify the construction of high performance low-noise converters

Gary Vander Haagen, K8CJU, 145 Enterprise Drive, Ann Arbor, Michigan 48103

In a conventional vhf or uhf converter consisting of an rf stage, oscillator-mixer and output i-f amplifier, the mixer is usually noisy and operates with substantial loss in signal. To overcome these problems, it is necessary to use a low-noise moderate gain front end and an output i-f amplifier to obtain a good noise figure along with over-all converter gain. The converter stage is generally responsible for this increased complexity, and although the problem is slowly being solved with improved semiconductors, one solid-state device that is ideal for this use has been largely ignored by amateurs—the hot-carrier diode.

Until recently the high cost of this device precluded its use in all but prestige military and high priced commercial equipment, but now prices are within the budget of the amateur. The hot-carrier diode is characterized by low-loss frequency conversion and extremely low circuit noise, so it makes an ideal frequency mixer stage.

By using hot-carrier diodes in an amateur converter, the rf amplifier and i-f output stage can be eliminated; all you need

is the hot-carrier diode mixer and local-oscillator injection. A simple two-meter converter using these techniques is described in this article. This converter performs as well as any conventional high-performance unit with only a fraction of the circuitry. Except for the diodes, all the components are the junk-box variety. The total cost of the five diodes is $7.50.

hot-carrier diode mixers

The hot-carrier or Schottky diode is a metal-on-semiconductor diode that rivals the point-contact diode (1N21 for example) in performance but far surpasses it in uniformity, reproducibility and reliability. Current through these devices is primarily by means of majority current carriers; usually electrons since they are the most mobile. When the hot-carrier diode is forward biased, the current carriers are injected into the metallic portion of the junction at energy levels much higher than free electrons, thus the name, "hot carrier".

For frequency-conversion applications the low-noise high-efficiency characteristics of the hot-carrier diodes are especially desirable. Conversion efficiency is typically *−2 to −3 dB (ratio of i-f power to incoming* rf power). The low noise contributed by the hot-carrier diode is a direct result of the device's characteristic current-vs-voltage curve.

The curves of **fig. 1** compare the characteristics of the point-contact diode with those of a hot-carrier device. It can be seen that the reverse breakdown voltage for the hot-carrier diode is much larger than that for the point-contact diode. With the higher reverse breakdown voltage of the hot carrier diode, it conducts less easily in the reverse direction, so is much quieter at normal operating voltages. The fact that reverse diode current is noisy should be obvious to any vhf experimenter who has used reverse-biased diodes as noise sources.

When a diode is used as a mixer, the local-oscillator signal alternately turns it on and off. When the local oscillator voltage swings in the reverse direction, a large amount of shot noise is generated by the point-contact diode. With the hot-carrier diode, very little noise is generated when the local oscillator voltage swings in the reverse direction.

As noted before, the higher efficiency and lower noise of the hot-carrier diode means that rf and i-f amplifier stages are not required. However, since some loss is introduced by the mixer, there is some reduction in over-all receiving system sensitivity. If, for example, a hot-carrier diode converter is used with a communications receiver that has a sensitivity of 1

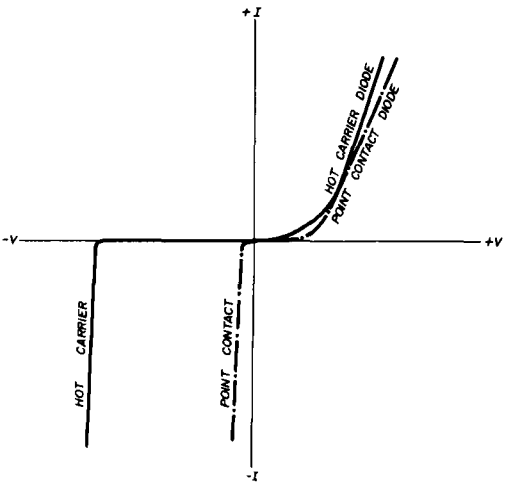

fig. 1. Volt-current characteristics of typical hot-carrier and point-contact diodes.

μV for 10 dB signal-plus-noise-to-noise ratio, the over-all receiving sensitivity with the converter is reduced to 1.6 to 2.0 μV for the same performance. This is still very competitive with existing high-performance converters.

Another characteristic in favor of the hot-carrier device is its large dynamic square-law range which means fewer problems with cross modulation from nearby high-level signals.

two-meter converter

The two-meter converter circuit shown in **fig. 2** consists of a double-balanced hot-carrier diode mixer driven by a crystal-controlled oscillator. The double-balanced

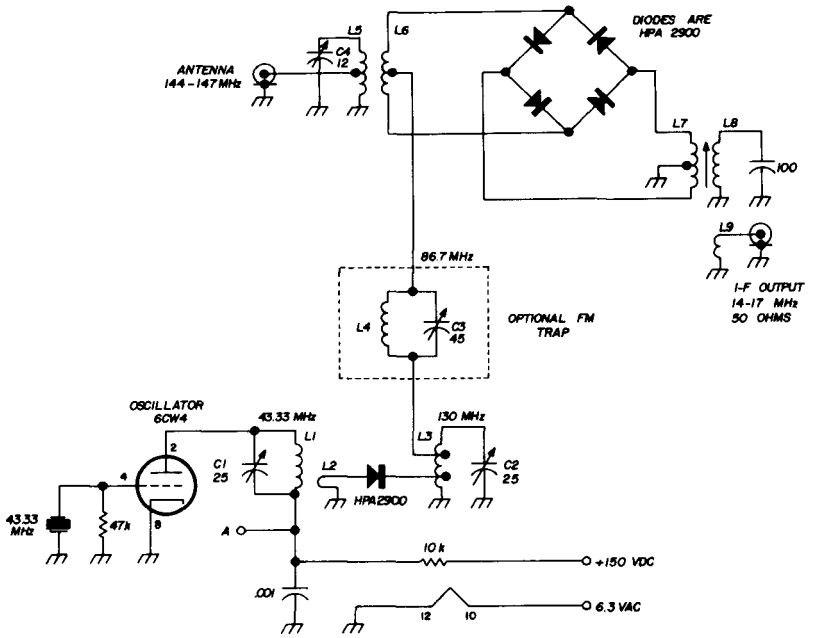

C1, C2 4.5-25 pF padder (CRL 822CN-N650)

C3 7-45 pF padder (CRL 822BN-N650)

C4 3-12 pF padder (CRL 822FZ-NPO)

L1 0.78 μH, 10 turns no. 20 air wound, 1/2" diameter 5/8" long (B&W 3003 coil stock)

L2 1 turn loop wound around bypassed end of L1

L3, L4 0.21 μH, 4 turns no. 18, air wound, 1/2" diameter, 5/8" long (B&W 3002 coilstock) Diode tap 1 1/2 turn from ground end; output tap 2 1/2 turns from ground end.

L5 5 turns no. 20 wound on 3/8" ceramic form, center tapped (J. W. Miller 4400 with slug removed); see fig. 4A.

L6 3 turns no. 20 enamelled wound over L5, center tapped; see fig. 4A.

L7 3 turns no. 20 enamelled wound over L8, center tapped; see fig. 4B.

L8 11 turns no. 20 enamelled close wound on 3/8" slug-tuned form (J. W. Miller 4400-2); see fig. 4B.

L9 2 turn loop wound over ground end of L7, L8.

RFC 2.0 μH, 20 turns no. 26 enamelled close wound on 1/4" form (National R60)

The HPA 2900 diodes may be purchased from any Hewlett Packard Sales office. Consult the Yellow Pages or write to Hewlett Packard, 620 Page Mill Road, Palo Alto, California 94304, for the address of your local sales office.

fig. 2. Schematic of the high-performance hot-carrier diode converter for 144 to 147 MHz. If you want all solid-state construction, use the transistor oscillator circuit shown in fig. 3.

mixer has a tuned input and tuned output and uses four Hewlett-Packard 2900 hot-carrier diodes. A fifth diode is used as a frequency multiplier from 43.33 MHz to 130.0 MHz. Local oscillator power is injected at the center tap of the input inductor, L6. Although a nuvistor local-oscillator stage is shown in **fig. 2**, a transistor stage, such as the one shown in **fig. 3**, could be used as well.

The oscillator circuit uses a third-overtone 43.33 MHz crystal. The output is loop coupled to the hot-carrier diode tripler; the tank circuit L3-C2 is resonant at 130 MHz. An optional fm trap is included in the local-oscillator injection line for use where strong signals from fm broadcast stations may mix with the second harmonic of the oscillator. If no strong fm stations are in the area the fm trap may be eliminated.

construction

The converter is built into a 2 1/8x3x5 1/4 inch minibox. The oscillator coil L1, tripler coil L3 and trap coil L4 are commercial air-wound inductors; the mixer

coils are wound on ceramic coil forms. Although the actual layout is not critical, good vhf construction techniques should be followed; all leads should be kept as short as possible, and the coils mounted at right angles for reduced coupling between circuits.

The nuvistor socket is mounted adjacent to the crystal and power socket. The four 45-pF trimmers (C1-C4) are mounted with ceramic spacers placing them about 1/8 inch from the box surface.

For L6 interwind 3 turns of number 20 insulated wire between the turns of L5 and connect the ends to the two coil lugs. Remove a small section of insulation at the center-tap point but be careful not to short the windings; connect an additional number 20 wire at that position. This is the oscillator connection.

The output transformer requires three lugs. If a junk box terminal is not available, you can use a small standoff insulator or terminal strip, but use minimum

Component layout of the two-meter converter. The crystal oscillator and multiplier stages are to the left; the hot-carrier-diode mixer is on the right.

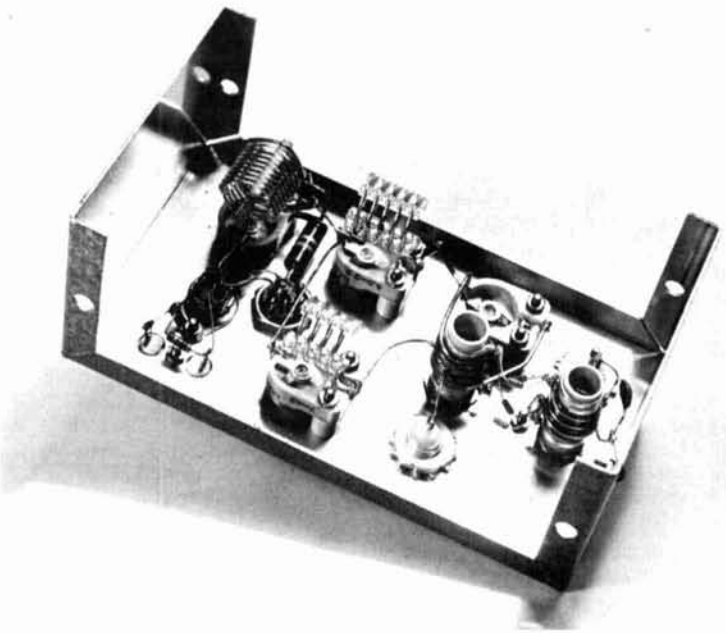

While the two mixer transformers are not especially critical, care in construction will improve the balance and oscillator rejection in the completed converter. The two transformer assemblies are shown in **fig. 4.** For the input transformer first wind 5 turns number 20 bare copper wire around the form, leaving about 1 1/2 inches at each end. Spread the turns so that the L6 winding may be placed between the turns. The coil should be about 1/2 inch long. Use a short piece of bare number 20 wire for the antenna tap.

lead length. First, wind 11 turns of number 20 insulated wire (L8) on the second form. Terminate one end on the upper coil terminal and leave the other end free for connection later to a ground lug. Secondly, wind 3 turns of number 20 bare wire (L7) over the center portion of L8 and attach both ends to the remaining coil lugs. Use a piece of number 20 wire for the center-tap local-oscillator ground return. The remaining output coupling loop (L9) is wound tightly over the ground end of L8 with the ends left for later connection to

ground and the output connector.

The four hot-carrier diodes should be mounted between the four coil lugs as shown in the photograph. Don't use excessive heat when soldering them into the circuit.

alignment

If the fm trap is used, put a jumper wire across this circuit before beginning the tune-up procedure. With the crystal and nuvistor in place, apply power to the circuit and adjust the oscillator for maximum output. Attach a dc voltmeter between ground and the junction of L1 and the 10k resistor (point A). When the 6CW4 is not oscillating, this voltage should be about 50 Vdc. Adjust capacitor C1 for maximum oscillator output while simultaneously checking that the oscillator will start. This can be accomplished by switching the B+ off and on after each adjustment. With the oscillator properly adjusted, the voltage at A will read 70 to 100 Vdc.

The transistor oscillator in **fig. 3** is adjusted by connecting a dc voltmeter between ground and the rfc–47-ohm resistor-

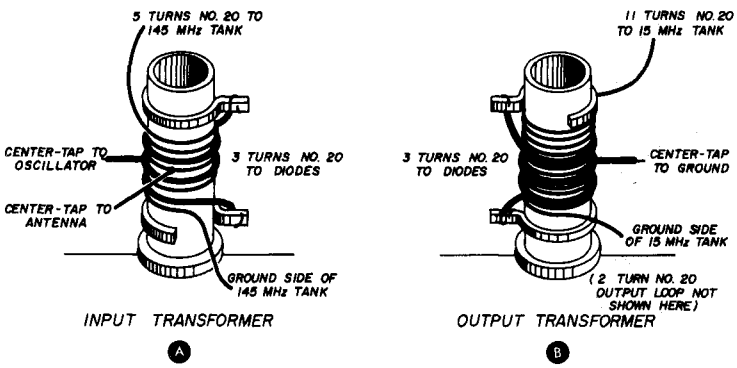

fig. 4. Construction details of the input and output mixer transformers. Each of the transformers is wound on a 3/8" ceramic form such as the J. W. Miller 4400. No tuning slug is used with the input transformer.

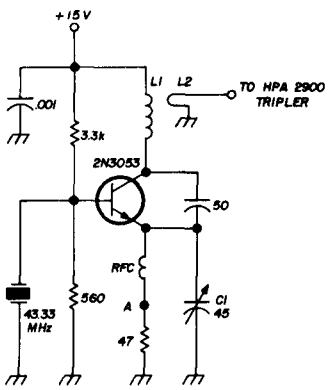

C1	7-45 pF padder (CRL 822BN-N650)
L1	0.38 μH, 6 turns no. 20, air wound, 1/2" diameter, 7/16" long (B&W 3003 coilstock)
L2	1 turn loop over bypassed end of L1
RFC	2.0 μH, 20 turns no. 26 enamelled close wound on 1/4" form (National R60)

fig. 3. Third-overtone transistor oscillator circuit suitable for the two-meter converter shown in fig. 2.

junction (point A). When the device is not oscillating, the voltage should read approximately 1.0 Vdc with a 15-V supply. Adjust capacitor C1 for maximum voltage reading (3 to 4 Vdc) and check for oscillator starting.

Connect the converter to a suitable receiver with a short piece of coaxial cable. With a 145-MHz signal applied to the input and the receiver tuned to the correct i-f frequency (15 MHz), adjust the tripler capacitor C2 for maximum signal strength. Then adjust the input circuit C4 for maximum signal strength. Adjust the position of the slug in the output transformer for maximum signal strength. Repeat the oscillator, tripler, input and output tuning steps, this time for maximum signal-to-noise ratio.

If fm interference is present, remove the short across L4-C3 and tune the trap for

minimum interference. Check to see that this adjustment didn't reduce the signal-to-noise ratio. If necessary, repeat the previous alignment steps to negate any interaction that may have resulted.

Local oscillator power should be more than sufficient, but the oscillator loop coupling should be changed (moved or more turns added) to verify that there is no increase in the signal-to-noise ratio as a result of increased oscillator drive. The converter requires 1 to 5 milliwatts of rf drive for optimum performance.

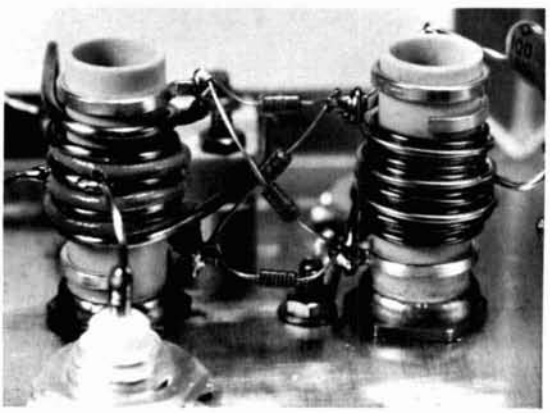

Closeup of the two mixer transformers and the four hot-carrier diodes.

closing thoughts

Some difficulty generally arises with any oscillator-multiplier system because of subsequent harmonic mixing: mixing of signals with the oscillator harmonics and falling within the i-f band. The optional trap circuit in **fig. 2** should handle most situations where very powerful stations are not next door. However, if fm stations continue through with the trap in place and the circuit is well shielded, about the only surefire alternative is to change the i-f. A double-tuned trap may also help.

The double-balanced mixer circuit and HPA 2900 hot-carrier diodes are suitable for operation over all amateur bands from 160 meters through 1000 Mc with suitable circuit modification.

ham radio

RCA has all-new FCC commercial license training

Get your license— or your money back!

Now RCA Institutes Home Study Training has the FCC License preparation material you've been looking for—all-new, both the training you need, and the up-to-date methods you use at home—at your own speed—to train for the license you want!

2 Convenient Payment Plans—You can pay for lessons as you order them, or take advantage of easy monthly payment plan. Choose the FCC License you're interested in—third, second or first phone. Take the course for the license you choose. If you need basic material first, apply for the complete License Training Program.

SPECIAL TO AMATEURS. *This course is primarily for Commercial License qualifications. But it does cover some of the technical material that will help you prepare for the new Advanced and Amateur Extra class tickets. Check out the information the coupon will bring you.*

Mail coupon today for full details and a 64-page booklet telling you how RCA Institutes Home Training can show you the way to a new career—higher income—and your FCC License.

RCA

RCA INSTITUTES, INC.
Dept. HR-09
320 West 31st Street, New York, N.Y. 10001

Please rush me, without obligation, information on your all-new FCC Commercial License training.

Name_____

Address_____

City_____ State_____ Zip_____

a practical discussion of product detector operation

Including a brand new high performance product detector using hot-carrier diodes

Mike Goldstein, VE3GFN, 22 Kingswood Road, Toronto 13, Canada

In the world of ham circuitry, where almost everything these days can be reduced down to oscillators and linear amplifiers, the product detector is probably the last frontier of mystery. The reason is elementary—even the simplest product-detector circuits operate on some pretty high-flying principles. Without delving into some frightening algebra these principles are a little hard for nonmathematicians to grasp. Let's discuss the whole thing down at the grassroots level, so the circuit that follows can be viewed with the utmost appreciation.

To start, the term "product detector" is very misleading. We know that the output of such a detector is basically the sum and difference of the two input frequencies (i-f and bfo), so why is the beast called a product detector? If you can't answer that question without peeking, then it isn't cricket to flip the page and look at the ads.

fig. 1. Output of this simple mechanical switching circuit is the product of the load resistance and the input current.

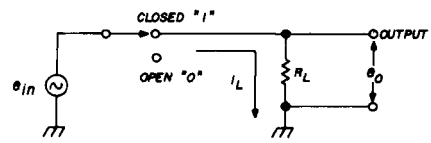

operation

Let's consider the operation of a simple switch, that is opening and closing, allowing current to flow in some load resistance

(**fig. 1**). When the switch is closed the current caused by the input signal produces a voltage drop across the load resistor which appears as a sine-wave output voltage. This output voltage has an amplitude $E_o = I_L R_L$ by Ohm's law. When the switch is open no current flows in the load resistor, and the output point sits at ground level, or zero volts.

The waveforms of this circuit could be plotted like those of **fig. 3.** If we close the switch at time T1, open it at T2, etc., we appear to generate a square wave having the levels "switches open" and "switches closed." Call the level when the switch is closed 1, and the level when the switch is open 0. When the switch is at 1 the current is I_L; when the switch is at 0 the current is zero. Another way of writing this is:

$$I_L \times 1 = I_L$$

$$I_L \times 0 = 0$$

Note that switching between the two levels effectively generates a square-wave of current. Now, let's bravely write the equations that describe the output voltage for the waveform of **fig. 3,** for the conditions of the switch being open and closed.

T1 → T2:

$E_o = I_L R_L$, $I_L \times 1 = I_L$;
so E_o does equal $I_L R_L$

T2 → T3:

$E_o = I_L R_L$, $I_L \times 0 = 0$; so E_o equals zero.

Note that each time we write the equation for the output voltage (E_0), it depends on the product of the value of R_L (which is constant) and whatever amplitude I_L has at the time. Another way of saying this is that the output voltage $I_L R_L$ is multiplied by the square wave that controls the current flow.

fig. 2. Putting a diode in the simple circuit of fig. 1.

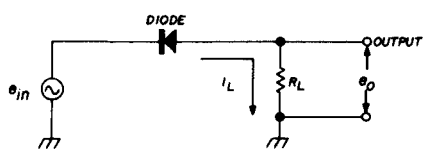

doing it electronically

Now let's get rid of the mechanical switch; use a good, fast, silicon switching diode instead. If we examine the characteristics of a switch and a fast diode, it appears that this substitution is legal. Could ten thousand computer engineers be wrong? **Fig. 4** shows the two characteristics.

Note that the silicon diode has a very little voltage drop across it when it is forward biased for conduction. This, of course, is the same with a switch. The switch does not delay in going from minimum conduction to maximum conduction, and the diode doesn't lag far behind. With the diode replacing the switch, let's look at our circuit again (**fig. 2**).

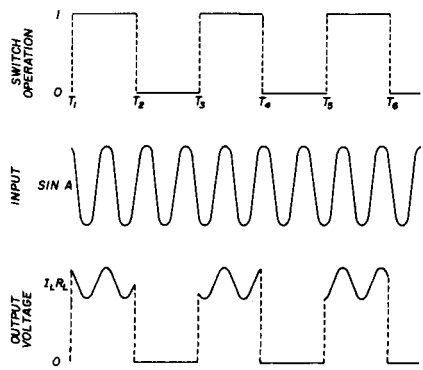

fig. 3. Timing diagram for the circuit in fig. 1 shows output is obtained only when the switch is closed, or in the "1" position.

We cannot close the diode switch by opening and closing a lever, but we can provide an electronic lever in the form of a square wave to do the switching for us. Let's define the square wave as having two levels, 0 and 1. **Fig. 5** shows the diode switch circuit being operated by this square wave.

What happens in the circuit? At T1, the square wave changes from the 0 to the 1 level, charging C to this level. The diode is now forward biased, so the switch has closed. The square wave allows the input voltage to produce a voltage drop across R_L such that $E_o = I_L R_L$.

You can now plot the waveforms for our new circuit. Looking at these waveforms, and comparing them with the waveforms plotted for the simple mechanical switch circuit, it is obvious that the waveforms, and therefore the equations describing those waveforms, are identical for either circuit. We are left, as before, with an output that is the product of the output voltage $I_L R_L$ and the square wave that controls the current flow. The only difference is that now the square wave is electronic, not mechanical. In each case, however,

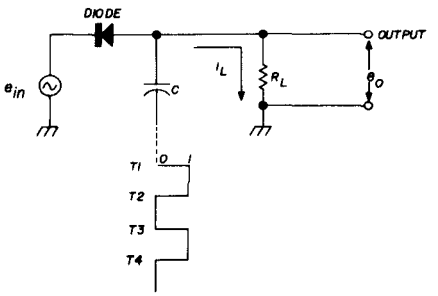

fig. 5. Practical diode switching circuit does the same job as the mechanical switching circuit in fig. 1; output waveforms of this circuit are shown in fig. 2.

the output is the product of the equations of the two input waveforms, so both circuits are detectors.

If we describe the input sine wave voltage as (sin A), and the switching square wave as (cos B + cos 3B + cos 5B + . . .)*, and we multiply these waveforms by trigonometrical methods, we will be presented with the terms (A + B) and (A — B),

*Square waves are made up from an infinite number of odd harmonics, hence the use of the terms 1, 3, 5.

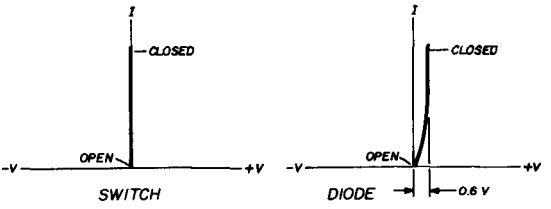

fig. 4. Turn on characteristics of silicon diodes compare favorably with mechanical switches.

among others. These are the sum and difference frequencies we are looking for, and the desired one is easily selected with a properly designed filter. For our purposes, we want only the difference frequency, so we can put a lowpass filter on the output of the detector to reject the high-frequency terms. Note that in perfect multiplication the fundamental input frequencies don't appear in the output.

diode switches

At this point you should understand how and why product detectors work and where they get their name. Look again at the basic diode switch, with a view to developing a working circuit from it. First, consider the output. We said that for a perfect multiplication, no input or switching waveform frequency terms appear in the output. Unfortunately, our diode isn't a perfect switch so this isn't necessarily true. Also, our switch is only conducting over half of the total period of the switching waveform. For optimum operation we have to find some diodes that look most like perfect switches, and make our circuit conduct for the total time, while retaining the multiplying feature of the operation.

fig. 6. High-performance product detector uses two Hewlett-Packard 2800 hot-carrier diodes at D1 and D2 (H-P also manufactures a matched pair, the 2804). The bfo input level should be an 8-volt p-p square wave; i-f input level is 0.3 volts maximum. L1 and the two .001 capacitors comprise a low-pass audio filter.

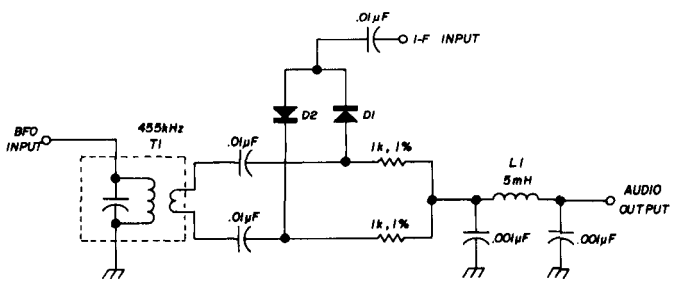

The way to beat the half-time conduction problem is to have two diodes in the switch such that one conducts for half the switching cycle while the other conducts for the remainder. The problem of the best diode is not solved easily, but a pair of matched hot-carrier diodes is a step in the right direction. These diodes are very fast, can be matched very closely in their characteristics, and have little voltage drop across them when conducting.

One more point that should be examined while we are still in the ivory tower section of this discussion is the subject of the switching waveform. It was stated that a square switching waveform was necessary, and for the best distortion-free output, this is true. However, it is quite in order to use a large-amplitude sine wave to perform the switching function with a good output filter to reject the resulting high-frequency products. Your ear is not likely to notice the difference.

practical circuit

We can now creep out from our ivy-covered hideout and examine a working (boy, does it work) circuit (**fig. 6**) with full understanding. The diodes used are matched hot-carrier diodes produced by Hewlett-Packard, who make wild claims for them, justifiably. The output resistors are precision toleranced to preserve circuit balance. The bfo voltage is fed to the diodes in push-pull to ensure that one is off while the other is conducting.

While the best output waveform was obtained using a square switching waveform, most of us would not bother making a squarewave bfo, and a sine wave switching voltage will produce a good linear output which is clean of hash after putting it through the filter. The audio output level is approximately half the amplitude of the input i-f level; this is only 6 dB attenuation. This circuit compares favorably with circuits using beam-deflection tubes and seems to operate completely within the limits of the theories discussed.

Confidentially, it's the best detector I've seen since I sold my tube puller!

ham radio

When it comes to antenna systems . . .

IS YOURS

a space problem? a budget problem?
an installation problem?
an applications problem?
or simply a problem of where to buy?

Your one-stop solution is

ANTENNAS, INC.

Exclusively specialists in radiating systems
Complete systems or any component part

Arrays — complete or in kit form, quads, yagis, dipole assemblies, verticals — fixed or mobile, towers, masts, rotors, guy and control cable, transmission line, coax relays and switches, connectors and adapters, test gear, technical publications, corrosion resistant hardware, corrosion proofing chemicals, insulators, installation and wiring hardware, aluminum tubing and plate, wire, and much, much more.

If your requirements are for a complete system, major components, or the smallest yet important piece of hardware — *ANTENNAS, INC.* has

AMPHENOL	HI-PAR
ANTENNA SPECIALISTS	E. F. JOHNSON
BELDEN	MILLEN
BILADA	MINI-PRODUCTS
BIRNBACH	MOR-GAIN
CALCON WIRE	MOSLEY
CDE ROTORS	NEWTRONICS
COMDEL	OMEGA-T
CUBEX	POLYGON PLASTICS
CUSHCRAFT	POMONA
DGP	ROHN
DPZ	SKYLANE
DOW-KEY	SWAN
EZ-WAY	TELREX
R. L. DRAKE	TIMES WIRE
HAM-KITS	TRI-EX
HY-GAIN	TRISTAO
GENERAL ELECTRIC	UNADILLA
GENTEC	VESTO
GOLDLINE	WATERS
GOTHAM	

ANTENNAS, INC.

Can be your one-stop, single-source

Write today for our catalog — no charge of course.

ANTENNAS, INC.

Dept. C, 512 McDonald Road
Leavenworth, Kansas 66048

hot-carrier diode noise blanker

A circuit that provides controlled limiting without distortion—featuring the HP-2800 hot-carrier diode

Ralph W. Campbell, W4KAE, 316 Mariemont Drive, Lexington, Kentucky 40505

When Hewlett-Packard announced the availability of inexpensive HP-2800 hot-carrier diodes (hcd), I was prompted to find uses for them as replacements for the silicon computer diodes so common in amateur equipment. Chief among their desirable characteristics is near-perfect linearity, not common in silicon or germanium units. The hcd's are closest to diodes such as the Sylvania 1N3731, but they have improved voltage-current characteristics when properly biased. They're also usable in vswr instruments because of their linearity. As mixers, hcd's exhibit comparatively low noise, and they're almost independent of local oscillator injection level. This is important in homebrewed converters without sophisticated equipment.

hcd noise blanker

Using HP-2800's in an i-f noise blanker seemed an ideal application, because they're essentially anti-overload devices. This may seem contradictory, because the usual blanker limits by overloading; however, cross-modulation can be so bad you may as well omit the blanker on local signals. Where these new diodes help is in a trough limiter circuit.[1,2] I adapted this principle to an Ameco PCL-P preamplifier (**fig. 1**) and added a full-wave, shunt-fed voltage doubler that short circuits on high negative spikes. This results in quite precise limiting, which is also effective on auto ignition noise. Output stage overload is prevented by the series input diodes biased to conduct the i-f signal and negative-going spikes only. Signal-to-noise ratio is greatly improved; in fact, with

the avc off you can see the blanker "ride back" on the random noise.

I found it necessary to build up incoming signal plus noise to about 20 dB so there would be adequate voltage threshold for noise suppression. This is the reason for building the blanking circuit into the PCL-P. I substituted 6DS4's for the sharp cutoff 6CW4 nuvistors to control overload on local signals. A big advantage in using the PCL-P adapted to a blanking circuit is that you can tune to any i-f range desired.

1N456 silicon junction diode in my SX-122 automatic noise limiter to an HP-2800. Now I can leave the anl switch in the "on" position with no audio distortion.

Assuming high-amplitude signals, here's how the hcd's and the germanium diode control the noise peaks: negative peaks are passed by D1 and D2; amplitude is about +0.3 volt average. The maximum negative-going i-f signal is sharply cut off to 0.22 volt by the trough diode. This means that the total pulse swing in the tee section is from +0.7 to −0.2 volt, with the reference voltage at about +0.3 volt. Leaving the tee network, this reference is clamped to zero volts dc, and only negative-going pulses are passed. The zero-voltage-clamped pulses and noise fragments are passed on the linear characteristic of the forward-biased hcd's; hence there's no loading in the following stage.

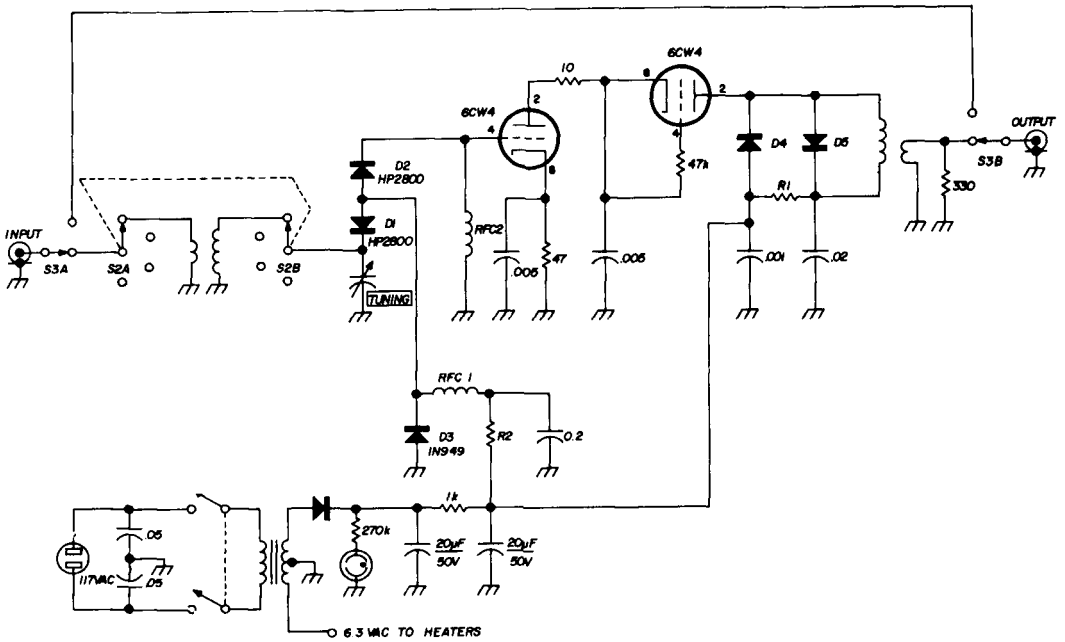

D1, D2, D3	Hewlett-Packard HP-2800	R1	68 ohms, 1/2 watt, 5%
D5	1N949, 1N995, or 1N3125	R2	150k, 1/2 watt, 10%
D4	HP-2800 or 1N3125	RFC1, RFC2	75 µH

fig. 1. Ameco preamplifier with W4KAE's noise blanker installed. D1, D2 are biased to conduct i-f signals plus negative-going noise pulses, which are clamped by trough diode D3; amplified spikes are then shorted by D4, providing controlled limiting. D3 may be elminated if D4 functions adequately without it.

theory

I tried several circuits, but none was as effective as the blanker presented here. The series noise gate was closest to providing desired characteristics, so I improved it to eliminate impulse-noise blasts by adding the trough diode (D3, **fig. 1**). I couldn't eliminate **all** the impulse noise, so I changed the

Diodes D4 and D5 comprise what I call a "shorted full-wave voltage doubler," because that's how I derived the network. It works! I've redrawn the circuit to explain its operation **(fig. 2).**

You'll see (**fig. 1**) that the output transformer's primary is heavily loaded; its secondary impedance is so low it's impractical to shunt limit here. In **fig. 2** I've shown D5's cathode and the lower end of R1 at ground potential, for illustration purposes. Thus R1

fig. 2. Derivation of the shunt limiter. D4, D5 comprise a "shorted" full-wave voltage doubler; in actual circuit R1 provides bias for D4.

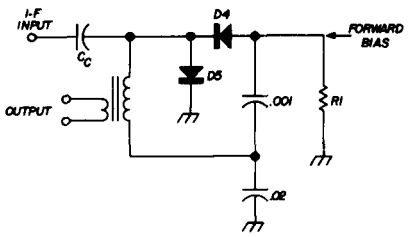

acts as a load resistor. D4 is in series with this hypothetical load and is shunted by the 0.001 and 0.02 μF capacitors. The i-f transformer return is connected to their junction.

Thus, if we have no need to extract power from such an arrangement, D5 can be replaced directly across the transformer primary. When conducting on noise peaks, D4 short circuits negative-going noise pulse since it's forward biased. R1 now serves as a bias resistor **(fig. 1).**

the complete circuit

Typical resistor values for positive diode bias input gating and output loading are shown in **fig. 1.** I replaced Ameco part designations with those shown in parentheses. You could substitute silicon epitaxial planar computer diodes for the hcd's, but you may have to change the bias resistors. R1, the output diode bias resistor, should be 33 ohms, 5 percent. Forward bias is 0.225 V. D4 and D5 are connected as a "shorted full-wave doubler," as discussed above. R1 should be at least 18 ohms; preferably 33 ohms, 5 percent tolerance. Any resistance higher than 33 ohms will drastically reduce the output.

D3 is the trough diode used with the HP-2800 hcd's. Type 1N949, 1N995 or 1N3125's are preferred. D1 and D2 are the passing/clamping diodes that limit signal plus trough noise through the nuvistors. The amplified, negative-going spikes are then limited in a controlled manner by D4. Bias developed across R2 is about 0.33 volt. A 10-percent tolerance resistor is satisfactory for R2, since its value isn't as critical as R1's.

construction

Because the blanker is built from the Ameco preamplifier, little need be said regarding construction. I made liberal use of button micas capacitors, which are mainly for tie points. Bypassing with large values of disc ceramics is necessary.

If you wish to try a saturation limiter, you can add a 10 kilohm wirewound potentiometer in the **"aux pot"** hole of the preamplifier.

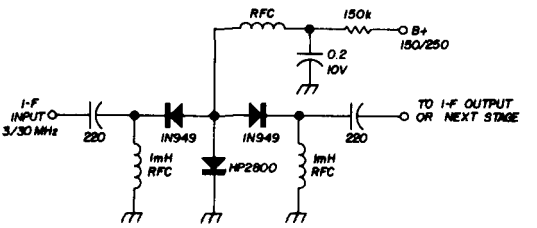

fig. 3. Typical values for the W4KAE Tee noise gate that can be used in usual i-f circuits.

generalized schematic

In **fig. 3** I've included a schematic showing typical values for the hcd blanker that can be added to most receiver i-f strips. If your i-f strip has about 20 dB gain, as mentioned previously, you can add the shunt limiter, using the component values shown in **fig. 1.**

references

1. James Kyle, K5JKX, "Receivers," Radio Bookshop, pp. 37-38.
2. Paul Franson, WA1CCH, "Diode Handbook," 73, January, 1968, pp. 10A-11A.

ham radio

2-Meter FM Goes *VERSATILE...*

FM20BM $235
Regulated AC Power
Supply and 20-Watt
RF Amplifier

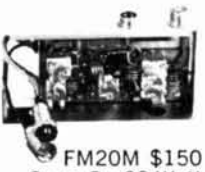

FM20M $150
Snap-On 20-Watt
Mobile RF Amplifier

FDFM-2 $250
Deluxe 2-Watt,
Six-Channel
FM Transceiver

BP-1 $12.95
Snap-On Portable
Battery Pack

PS-1500 $44.95
Regulated AC
Power Supply

You bet! See the complete package
at your local dealers.

Inoue Communications Equipment Corporation

VARITRONICS INCORPORATED

3835 North 32nd Street • Suite 6 • Phoenix, Arizona 85018

Dealer Inquiries Invited

See Us at the Southwest Division Convention in San Diego.

low-cost integrated circuits for amateur equipment

Simple new consumer ICs should appeal to the home builder who is looking for higher performance with less complexity

Paul Franson, WA7KRE, 7430 E. Minnezona Avenue, Scottsdale, Arizona 85251

Motorola's recent introduction of simple integrated circuits designed specifically for inexpensive consumer equipment should interest the building ham. Consumer electronics components have always been inexpensive, both because of the huge quantity sold, and because of the demands of equipment manufacturers for lowest costs. But these new consumer circuits are even intended to compete for sockets in the toughest markets of all—those for pocket radios and cassette recorders in the Orient.

It's obvious that this places considerable demands on the American semiconductor manufacturer. The products must offer prices and performance comparable to those obtained from low-cost transistors. This creates quite a challenge to IC manufacturers who have been making parts mostly for industrial, computer and military equipment. However, U.S. manufacturers have considerable experience in the Far East. Most major producers have plants in Korea, Taiwan, Japan or Hong Kong. Motorola's plant in Seoul, Korea, for example, assembles transistors and IC's using completed silicon dice supplied from Phoenix, then ships the transistors back to Arizona for testing and quality control. And plastic transistors manufactured wholly in Phoenix compete aggressively in such penny-conscious areas as Hong Kong. The highly efficient sophistication of mechanized assembly can compete with wage costs far lower than in the U.S.A.

The producers of plastic transistors at Motorola have applied the knowledge gained in producing hundreds of millions of devices to IC production. They are using the same efficient mass-production techniques and automated computer testing used for transistors for making simple, easy-to-use IC's. Instead of 12 or 14 pins, these new IC's have only 4 to 8. The pins are widely spaced (0.16 inch) compared to conventional dual inline packages (DIPs) (0.10 inch) for non-critical circuit-board construction and assembly, yet the packages (**fig. 1**) are a fraction of the size of DIPs to save space (0.20 inch wide in-

stead of 0.72 inch).

A big advantage of these IC's is the simple external connections. Instead of making the circuits from the exceptionally high-performance transistors necessary for very wideband service, the transistors are designed for specific uses—audio or moderately low frequencies. Thus they don't need extensive compensation to prevent oscillation or for desired performance.

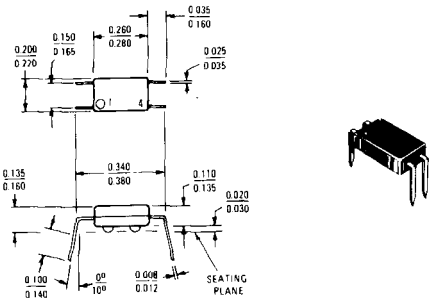

fig. 1. Case outline and drawing of the package used for the new MFC4000 and MFC4010 consumer integrated circuits.

Now let's take a look at two of the new circuits and some of their applications.

audio amplifier

The Motorola MFC4000 is a 1/4-watt audio amplifier requiring no transformers. That doesn't sound like much, but it's plenty for most ham applications. Remember that those high-power stereo amplifiers are generally designed for use with speakers having low efficiency, and must be able to deliver extensive power at the low frequencies where our ears aren't very sensitive. The average portable radio has an output of 1/4 watt or less, and is more than adequately loud over its restricted bandwidth: the communications bandwidth is (supposedly) even less.

The MFC4000, which costs only $2.10 in small quantities, operates in class B, so idle current is low, typically only 4 mA. Harmonic distortion is low, too, typically under 1%.

The circuit of the MFC4000 is shown in **fig. 2.** The external test circuit the manufacturer uses is also shown. The IC uses 6 transistors, 3 diodes and 5 resistors. The output is a quasi-complementary circuit consisting of two transistors (Q4 and Q6) driven by a complementary pair (Q3 and Q4). Resistors R4 and R5, with diodes D2 and D3, set and stabilize the bias for the output stages. Transistor Q2 is a driver, while Q1 and its associated components maintain stable bias for the whole circuit.

The external 250-μF capacitor furnishes blocking to prevent shorting the output and to keep dc out of the speaker. The 10-kilohm resistor sets the dc bias and provides dc and ac negative feedback, reducing distortion and providing good thermal stability. The resistor-capacitor network increases feedback at higher frequencies, shaping frequency response.

The .005-μF capacitor at the input stabi-

fig. 2. Circuit of MFC4000 1/4-watt audio amplifier (A) and manufacturer's test circuit (B).

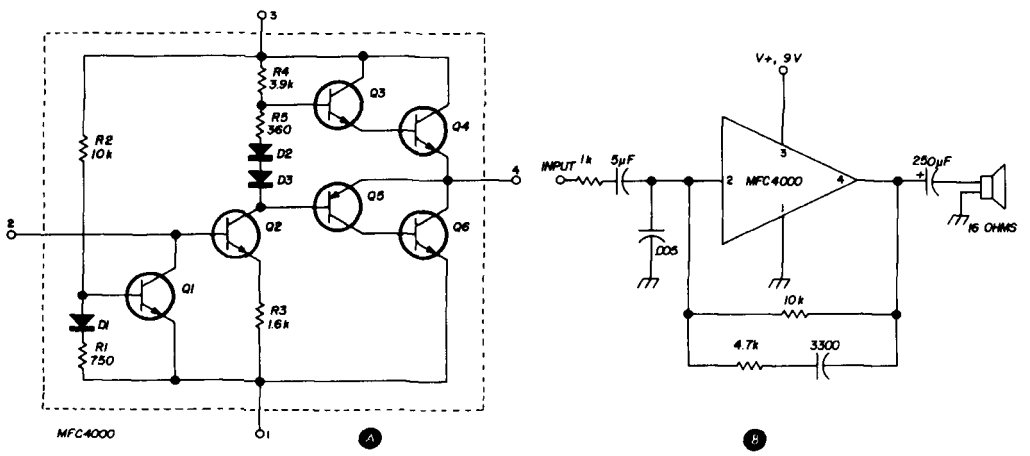

lizes the circuit at high frequencies and prevents reception of local a-m broadcast stations and stray electrostatic fields. The series input resistor is not needed with moderately high impedance signal sources.

This circuit works well. With a 9-V supply, it requires a maximum of 15 mV input for 50-mW out. Typical output power at 10% total harmonic distortion is 350 mW. At more usual output levels (50 mW), distortion is only 0.7%. Maximum power supply voltage is 12 V.

A few words about mounting the MFC4000: no sockets seem to be available, but none are really necessary. Its pins fit perfectly in Vectorboard pattern F. Small rivets provide simple soldering, or the old wrap-around technique is satisfactory. However, some means of dissipating heat is necessary for full output. The maximum power dissipation is 1 watt at 25° (ambient temperature) and should be derated 10 mW/°C above 25° C. For breadboarding, I attached an alligator clip directly to pin 1 (ground) since most of the heat is transmitted through this pin, and the package stayed cool. A better approach would be to use a copperclad circuit board with as much copper area as possible within a couple of inches of pin 1.

Another circuit using the MFC4000 is shown in **fig. 3.** Here an inexpensive transistor, the MPSA70, has been added for high amplification. The feedback resistor has been modified for best results, and the compensation and series capacitors chosen for the limited bandwidth desirable in communications equipment. If you want to widen the bandpass for use in music, increase the input and output capacitors, and the 30-μF parallel feedback capacitor, and reduce the size of the 0.22-μF capacitor.

fig. 3. High-gain amplifier with bandwidth restricted for communications applications.

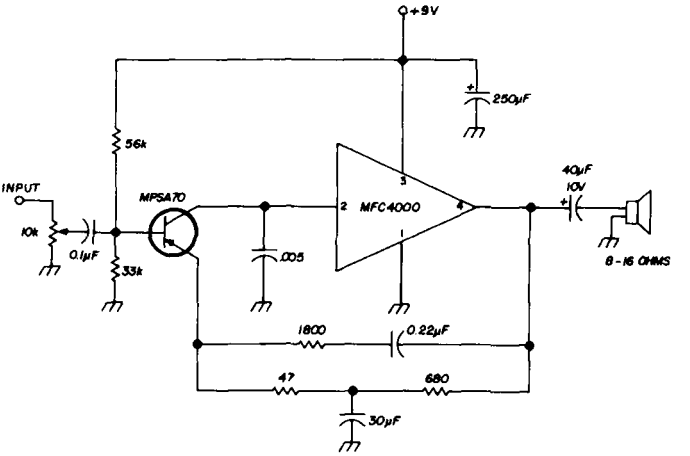

wideband amplifier

The Motorola MFC4010 is a wideband amplifier, or gain block, designed for general audio or i-f applications up to 500 kHz or so. It is a simple, three-transistor circuit providing a minimum of 60 dB gain, and is useful for saving space and components in many applications. The MFC4010, which costs about $1.85, uses the

fig. 4. Circuit of the MFC4010 gain block (A) and test circuit (B). The 120k feedback resistor is relatively critical; the value shown is for 6 V operation.

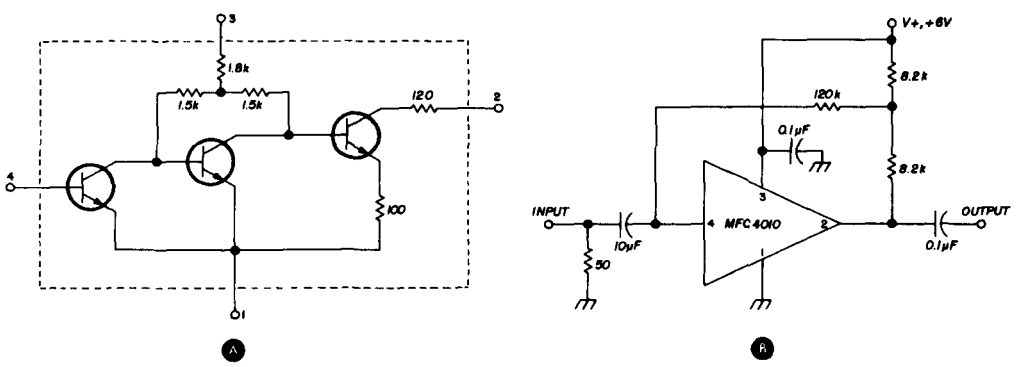

same small 4-pin package as the MFC4000 (**fig. 1**).

The internal schematic of the MFC4010 is shown in **fig. 4** with its test circuit. As you can see, few external components are required to provide high amplification, can be fed to a controlled dual-gate mosfet for audio compression.

Another interesting application of the MFC4010 is shown in **fig. 6.** This is a complete 455-kHz i-f strip using ceramic transfilters and voltage-doubling detection. It

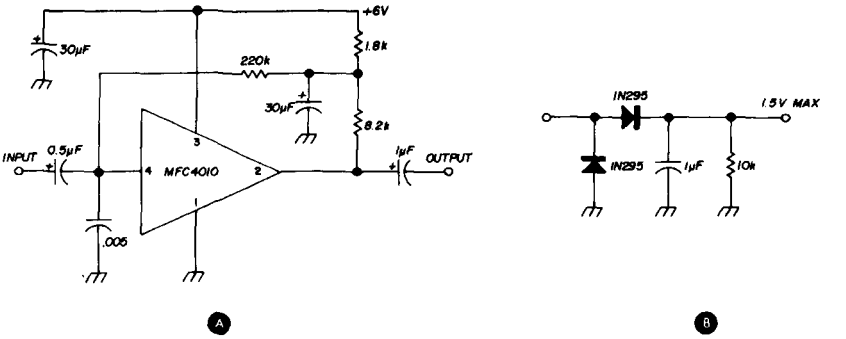

fig. 5. High-gain preamplifier and rectifier for ssb agc, vox or audio compression.

typically 70 dB. Other parameters of interest are maximum power supply voltage of 18 V, maximum power dissipation of 0.5 W at 25° C ambient temperature, and typical current drain of 3 mA. Parameters at 1 kHz are h_{11} of 1000 ohms (equivalent to h_{ie} of a simple transistor), h_{12} (h_{re}) of 10^{-6}, h_{21} (h_{fe}) of 1000 and h_{22} (h_{oe}) of 10^{-5} mho.

Other circuits using the MFC4010 are shown in **fig. 5** and **6.** The high-gain audio amplifier in **fig. 5** is suitable for use as a microphone preamplifier. As in **fig. 3,** capacitor values have been chosen for communications applications. The .005-μF input capacitor is necessary to prevent detection of close-by a-m broadcast stations. A simple voltage-doubling rectifier is also shown. This can be added to the amplifier for use in ssb agc, or vox, or the output works well with a conventional front end. Agc voltage is provided for controlling stages before the MFC4010. A dual-gate mosfet (MFE3006) would be ideal as a mixer or rf amplifier. The transfilters could be replaced by a mechanical or crystal filter, or by more conventional i-f transformers. Don't forget to provide dc blocking for the input and output if you use a device without blocking (the transfilter appears as a capacitor).

summary

New consumer integrated circuits such as the Motorola MFC4000, and MFC4010 provide many possibilities for the ham experimenter and builder. They can be used to make compact equipment with excellent performance at low cost.

ham radio

fig. 6. 455-kHz i-f amplifier using MFC4010.

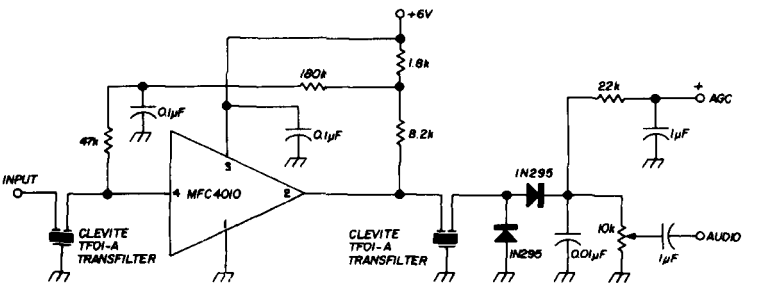

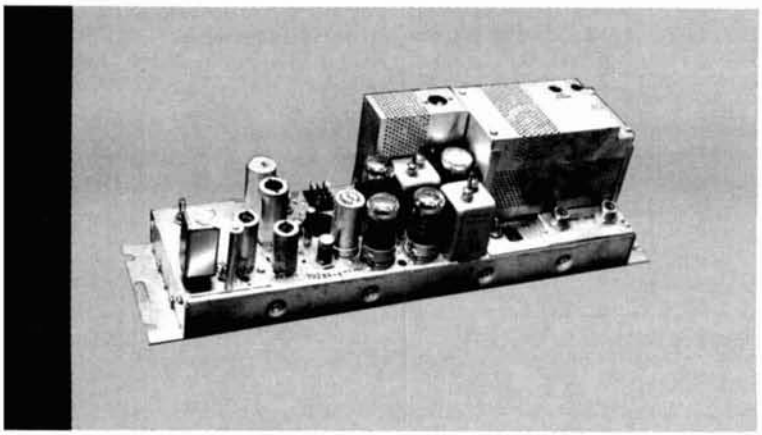

improving the fm repeater transmitter for amateur use

These simple modifications increase circuit Q and provide improved performance through lower receiver desensitization

J. Jay O'Brien, W6GDO, 6606 Fifth Street, Rio Linda, California 95673

A large number of amateur 144-MHz repeaters and remote-base stations make use of the Motorola PA-8491 60-watt high-band transmitter. This transmitter is ideally suited for repeater use but a few simple modifications will greatly improve its operation.

This transmitter, similar to others produced by Motorola and others, uses relatively low-Q tuned circuits. The low-Q circuitry permits moving the transmitter frequency a megahertz or more without retuning, and also permits replacement of oscillator and multiplier tubes with essentially no retuning required. In amateur repeater service these advantages, however, are far overshadowed by the problems generated by the broad spectrum of noise that the low-Q circuits permit the transmitter to emit.

The "white noise" is the cause of most receiver desensitization in amateur repeaters, especially in close-spaced systems that receive on 146.34 MHz and transmit on 146.76 or 146.94 MHz. The broad noise spectrum from the transmitter covers weak

signals on the receive frequency, causing the repeater receiver to be less sensitive with the repeater transmitter on than it is when the transmitter is off. This problem was covered very well by K5ZBA.[1]

This desensitization usually results in repeater "pumping." This occurs when the signal received at the repeater receiver is strong enough to actuate the repeater when the repeater transmitter is off, but is not strong enough to keep the repeater on when the repeater transmitter (and its white noise) is on. Under these conditions the repeater transmitter comes on, generates white noise that causes the repeater receiver to lose the incoming signal, and the repeater transmitter turns off. As soon as the transmitter is off, the receiver again detects the incoming signal and the cycle repeats itself.

fig. 1. Grass Valley repeater station, Wolf Mountain, California. This repeater covers most of the Sacramento Valley. The uhf and vhf equipment is shown here; decoder equipment is in another cabinet.

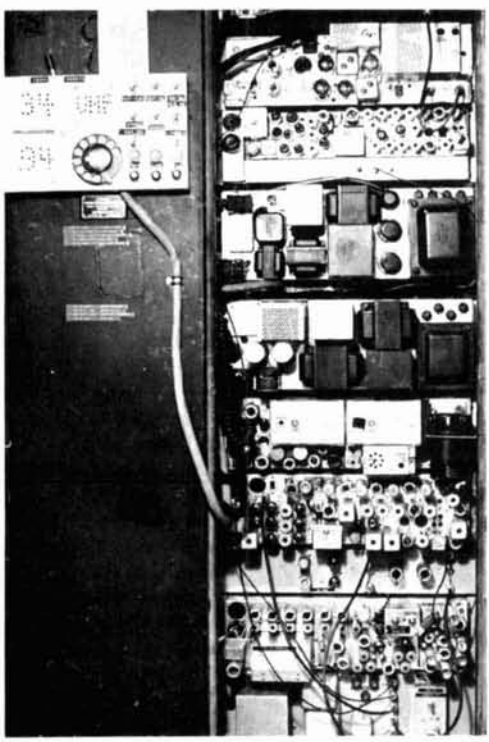

photos by WA6ESA

desensitization measurements

While preparing a repeater remote station package for mountaintop installation, desensitization tests were made under laboratory conditions. The 146.94 MHz transmitter was fed into a dummy load through a Bird Thruline wattmeter and adjusted for 60 watts output. A probe (such as the iso-tee[1]) was coupled to the dummy load, through a 10-dB 50-ohm attenuator to a milliwatt meter; the probe was adjusted for 60 mW indicated on the milliwattmeter (this represents a 30 dB loss from the transmitter to the milliwatt meter).

The connection from the 10-dB attenuator to the milliwatt meter was then disconnected and connected instead to the receiver input through a precision zero-to-50-dB 50-ohm attenuator. A signal generator was coupled through a 40-dB-loss probe into the line between the zero-to-50-dB attenuator and an unmodified Motorola Sensicon A receiver.

Receiver sensitivity was measured through the probe with the transmitter off; then the transmitter was keyed, and the zero-to-50-dB pad was adjusted to produce a loss in sensitivity of the receiver. This loss in sensitivity (desensitization) was measured as the number of dB of signal power increase required to produce the same amount of quieting (20 dB was used for these tests) as when the transmitter was off.

This measurement was performed with various amounts of transmitter power fed through the zero-to-50-dB attenuator into the receiver, thus simulating different amounts of antenna coupling loss; this loss is equal to the zero-to-50-dB attenuator setting plus the 30-dB probe loss.

It was initially determined that before we modified the repeater transmitter 79 dB of coupling loss produced 3 dB of receiver desensitization. This is equivalent to more than 60 feet of vertical separation between dipole antennas for receive and transmit. After modifying the transmitter, 41 dB of coupling loss produced 3 dB of desensitization; this can be obtained with 15 feet vertical separation between di-

poles, and represents 38 dB improvement.

Note that for these tests coupling from transmitter to receiver must be only thru the zero-to-50-dB attenuator. Direct radiation coupling must be incidental. This can be accomplished by separating the transmitter from the receiver in the rack, and placing other equipment in between. Shielding was not found to be necessary.

Transmitter modification consists of raising the circuit Q of the intermediate tuned circuits. This is done by adding capacitance across the tuned circuits in question, and in one case by reducing the coupling between tuned circuits. It is possible to obtain a couple of dB of additional benefit by critical slight detuning of the transmitter tuned circuits, however, this added improvement is not generally worth the added difficulty of adjustment.

transmitter modifications

The necessary transmitter modifications are quite simple, and are shown in the accompanying photographs.

A schematic diagram of the Motorola PA-8491 transmitter (less the filament circuit) is included on page 54 of the "FM Schematic Digest"; $3.95 from Two-Way Radio Engineers, Inc., Dept. HR, 1100 Tremont Street, Boston, Massachusetts 02120

fig. 2. Bottom view of chassis, showing the added components.

1. Install two high quality 10-pF tubular ceramic capacitors across transformer T1: one capacitor from the plate of V2 to ground, the other from the grid of V3 to ground. These new capacitors are shown in **fig. 2.**

2. Install high quality 5-pF tubular ceramic capacitors across T2, L3 and L4 as follows: from the plate of V3 to ground, from the grid of V4 to ground, from the plate of V4 to ground, and from the grid of V5 to ground.

fig. 3. This photo shows the 8-pF air variable which is installed across the grids of the final amplifier.

3. Install a 1-to-8-pF variable capacitor across the grids of the final amplifier. The E. F. Johnson 160-104 capacitor shown in **fig. 3** does an excellent job but any similar air variable should work as well. This modification increases grid drive, improves efficiency, and raises the power output of the 829B final. An insulated tool must be used for adjusting this capacitor.

4. The coils at the plate of V4 and the grid of V5 (L3 and L4) are overcoupled, thus lowering the effective Q of this interstage network. Decouple these coils by mounting a small copper tab between them (**fig. 4**). Adjust the size of the tab so that after retuning, the driver grid drive is slightly less than before; an indicated drop of one microampere as measured at test position 5 should be about optimum. You will notice that the coils tune sharper

as you decouple them; this is an indication of increased circuit Q.

results

At our installation, we measure 64 dB of coupling loss between two three-element Yagis spaced 18 feet vertically on our tower. This is an acceptable figure for the modified transmitter. The top antenna is used for transmit on 146.94, and the bottom antenna for receive on 146.34 MHz. A 146.94 MHz receiver is also connected through the transmitter antenna relay to

fig. 4. The decoupling tab between coils L3 and L4 increases circuit Q.

the upper antenna. Both 146.94 and 146.34 are retransmitted as received to the control stations on the 440 MHz "down channel". No cavities are used in either the transmitter or receiver feedlines. With a weak signal (15 dB of quieting—about 0.3 microvolt) being received on 146.34, no change in limiter current or in quieting is noted by switching the 146.94 MHz transmitter on and off.

One note of caution, however; the swr must be low on both antenna feedlines. When the swr is high, the feedlines become part of the antenna, and since the feedlines usually run parallel to each other, the coupling loss between antennas is lowered.

measuring coupling loss

It is a good idea to measure the coupling loss between antennas to determine if it is adequate. The coupling loss between the two antennas may be measured by first connecting the signal generator (on 146.34 MHz) through a 6- to 10-dB attenuator to the 146.94-MHz antenna. Connect the 146.34-MHz antenna through a 6- to 10-dB attenuator to the 146.34-MHz receiver. Adjust the signal generator for a reference limiter current reading in the receiver. Now disconnect the attenuators from the antennas, and connect the attenuators to each other. The signal generator is then connected through two attenuators to the receiver. Reduce the generator attenuator loss until the reference limiter reading is again obtained. The difference in attenuator settings on the signal generator is the coupling loss.

reference

1. J. A. Murphy, K5ZBA, "Receiving System Degradation in FM Repeaters," *ham radio*, May, 1968, p. 36.

ham radio

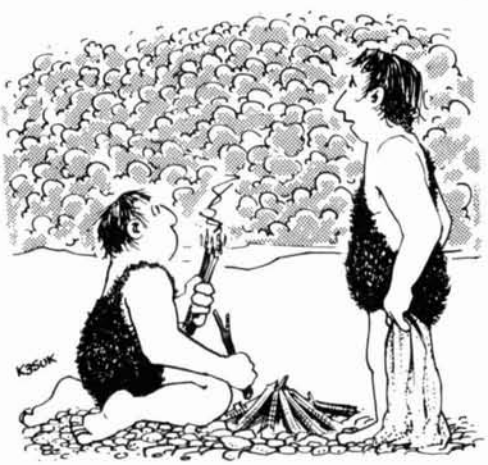

"Either the skip is open to California or the whole damn country's on fire!"

construction of high-frequency diversity antennas

Complete details on building new antenna designs described previously in ham radio magazine

George A. H. Bonadio, W2WLR, 373 East Avenue, Watertown, New York 13601

Four antennas of novel design and unusual characteristics have been described in **ham radio.**[1] Performance data and a brief description of physical arrangements and switching circuits were given. This article presents construction details on these antennas and their related components. Some observations are also given on how to get the best performance from the designs. My recommendations on feeder and element balance, as well as tuner and switching details, should be followed closely if you wish to duplicate the performance I've obtained.

Before deciding whether to build one of these antennas, it might be helpful to consider some of their important aspects. Initial cost is fairly high, but once installed and tuned, maintenance is no problem. My space-dimensional antenna has been performing well for several seasons with no attention.

Another thing to consider is that while these are not beam antennas they raise DX very well. An additional redeeming feature that justifies the initial investment is their excellent response to short-period selective fading. This is accomplished by a switching system that permits instantaneous pattern changes.

bonadio designs

The four antenna designs are the square diagonal, **fig. 1;** the box diagonal, **fig. 2;** the cube diagonal, **fig. 3,** which performs similarly to the box diagonal; and the space-dimensional antenna, **fig. 4.**

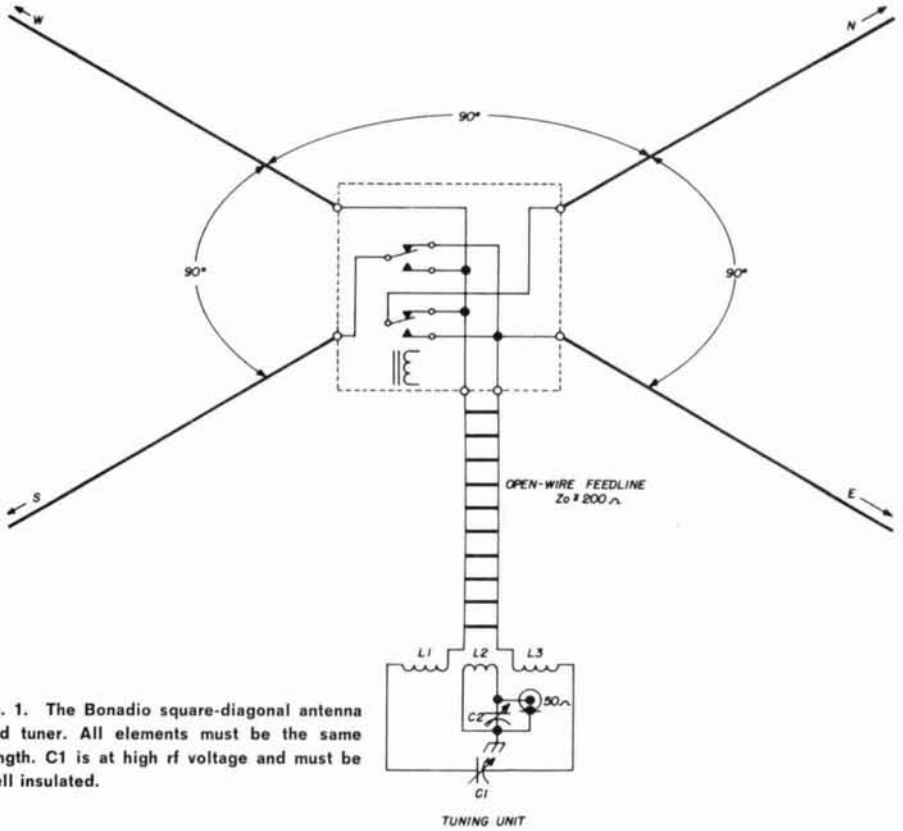

fig. 1. The Bonadio square-diagonal antenna and tuner. All elements must be the same length. C1 is at high rf voltage and must be well insulated.

characteristics

A glance at the diagrams shows many common parameters. The most important is the symmetrical relationship between element length, element spacing, support spacing, and angular element separation. The tuner system is the same for antennas. The coax link is series tuned above 10 MHz and parallel tuned for lower frequencies.

Compass directions are shown for antenna orientation. NU, NL represent north upper element, north lower element, etc. For the cube diagonal, elements must be spaced so that NU NL = NU EU = EU SU, etc. Angular separation of the cube diagonal elements is 70.5 degrees. While an excellent performer, the cube diagonal requires a rather complex switching system, and its nulls and general performance are eclipsed by the space-dimensional antenna. As with the other designs, symmetry and balance are a must in the space dimensional to obtain the deep nulls and optimum standing wave ratio over

Space dimensional antenna used in tests. It uses mobile mounts for elements, which are 9-foot whips whose ends are secured with 60-pound nylon fish line.

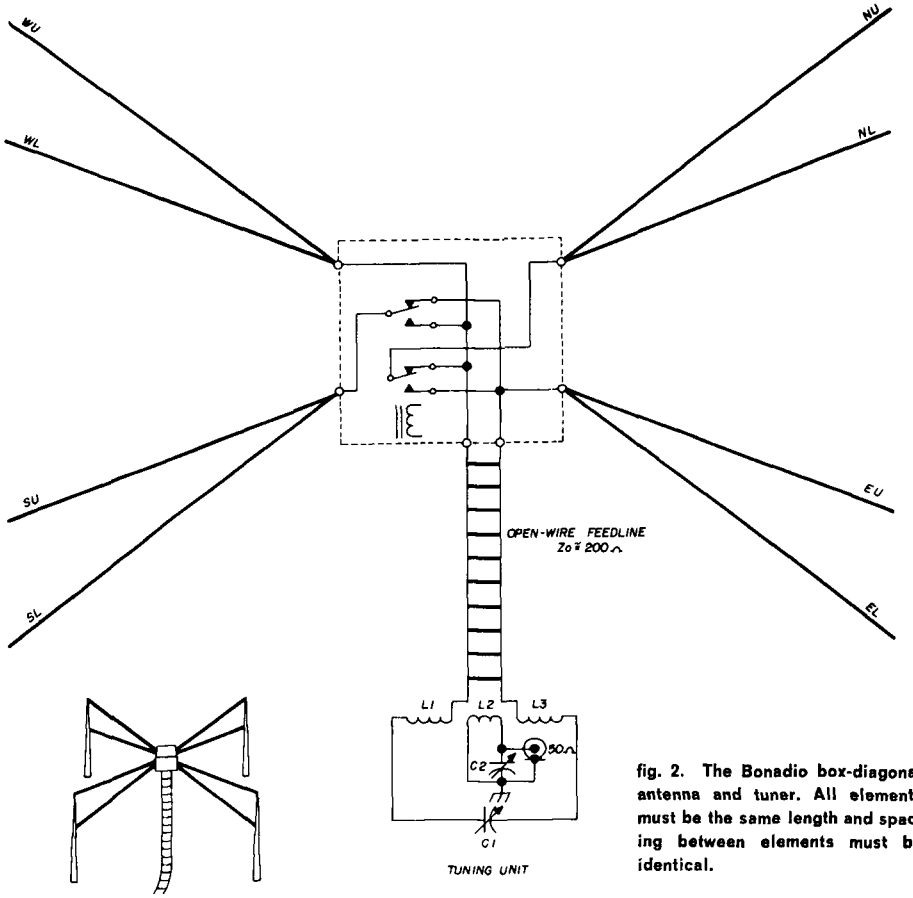

fig. 2. The Bonadio box-diagonal antenna and tuner. All elements must be the same length and spacing between elements must be identical.

its bandwidth. All angles for the space dimensional are 90 and 180 degrees, and all elements are the same length.

Another parameter common to Bonadio antennas is feed-point impedance. It is close to 200 ohms for very short wavelengths, with a small reactance component. The impedance varies in a cyclic fashion as wavelength increases. This is discussed in the description of antenna matching and transmission line design.

obtaining comparative data

To analyze the characteristics of these designs, you should have a control or comparison antenna. The best comparison antenna is the one you've been using. Don't worry about interaction between systems. There will be enough difference in reports between systems to provide valid data. The idea is to obtain as much quantitative data as possible over a given time period, because the larger the sample data size, the more realistic will be the final analysis. You won't need a computer to influence your opinion, nor will you have to rely on qualitative statements of others who might be using the same system. A large quantity of signal reports will convince you.

making a choice

Consider your antenna space. It can be anything from your bedroom ceiling to the back 40 acres. Study the types of supports needed for each of the four antennas. If you plan on three tall and three short flagpoles, for example, you're aiming at a terrific antenna, but a terrific cost for supports. Perhaps by relocating and redesigning your installation, you can borrow some buildings or other towers and trees. If you have the space, guyed towers are relatively inexpen-

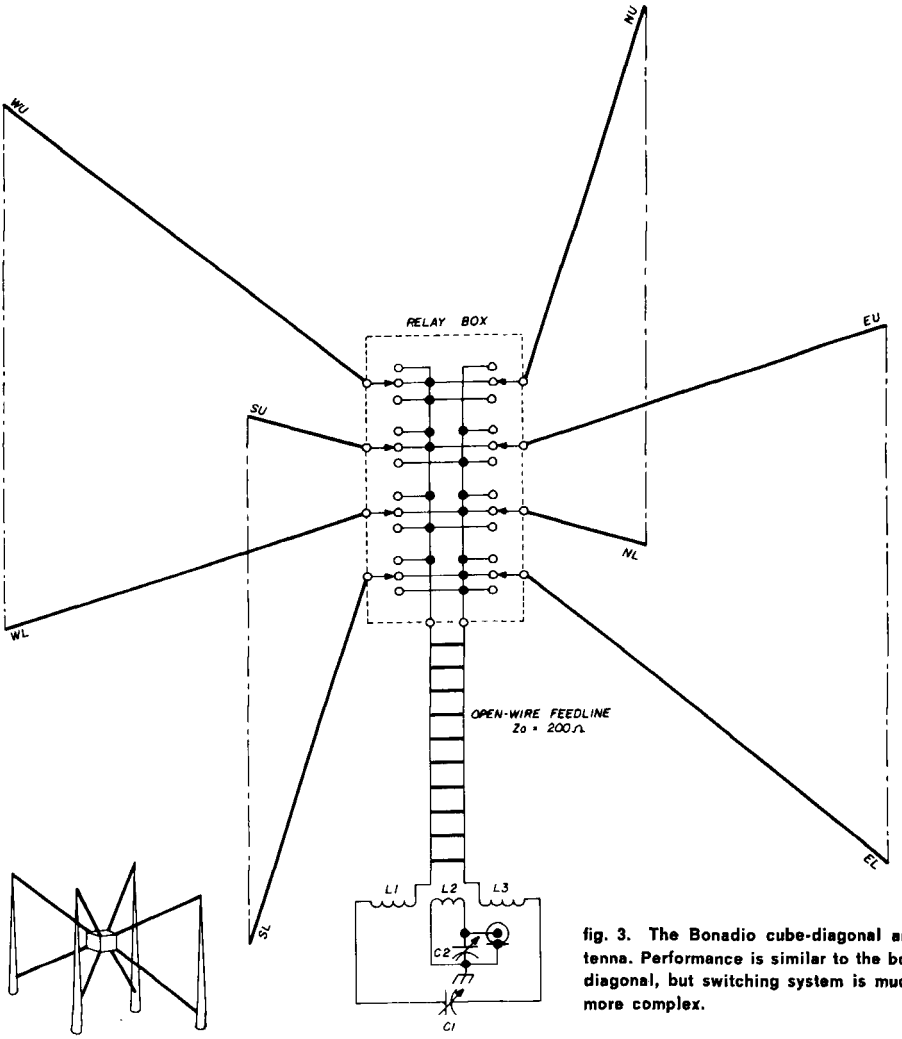

fig. 3. The Bonadio cube-diagonal antenna. Performance is similar to the box diagonal, but switching system is much more complex.

sive. Guy wires should be broken every twelve feet with strain insulators to avoid pattern discontinuities. Self-supporting towers are nice, but they cost a lot and require concrete bases. Flagpoles bear investigating.*

some definitions

Before starting construction, it's necessary to calculate the wavelength representing the lowest frequency at which an antenna of a given size will perform at full efficiency. The natural wavelength of an antenna will be termed λ_n. A wavelength that corresponds to λ_n plus 50 percent is called λ_L—the longest available wavelength at top efficiency. This is a parameter on which all Bonadio antennas are based and is extremely important. Here's how it is determined.

The λ_L of a square diagonal antenna is the distance around the perimeter of the square (which is its λ_n) plus 50 percent **(fig. 5).**

The λ_L for either the box diagonal or cube diagonal is the distance around three sides of the top of the box or cube, then down both the two attached sides of the box or cube, then across the bottom connecting edge (this is its λ_n) plus 50 percent **(fig. 6).**

The space dimensional antenna's λ_L is equal to the total length of its six elements;

* John E. Lingo & Son, "B" Division, 28th Street and Buren Avenue, Camden 5, New Jersey.

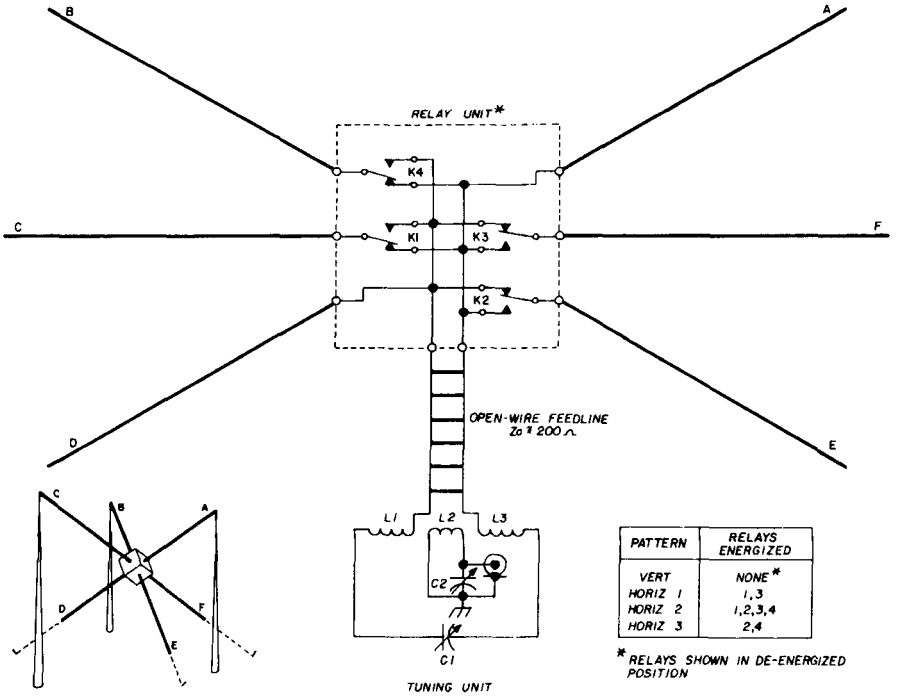

fig. 4. The space-dimensional antenna. Geometry and balance requirements are the same as for the other antennas, but performance is better. Three horizontal radiation patterns from this antenna are shown in fig. 11.

its λ_n is equal to the total length of any four of the six elements. If any of these antennas are driven with waves which are longer than its λ_L, it will still operate, but with less efficiency, about −6 dB per octave.

size losses

To determine the falloff of signal strength with antenna size, I compared a box diagonal with a space dimensional. The box diagonal antenna used 60-foot elements of number 8 aluminum wire, and the space dimensional had 10-foot elements and number 4 copper-wire feeders. These antennas, which were instantly switchable, were at a conveniently low height of 22 feet above ground at their centers.

On 20 meters, the antennas performed essentially the same (**fig. 7**). The space dimensional, with an λ_n of 23 MHz and λ_L of 15 MHz, was better on 15 meters and 10 meters. However, as expected, it fell off on 40, 80 and 160. On 160 meters, some of this loss was due to an outboard loading coil (number 16 silver-plated wire) that ran very warm. The larger antenna being used as a standard also fell off, since it was operating beyond λ_L. Also, as expected, the larger antenna exhibited a slightly smaller range of fading depth.

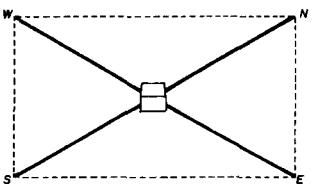

fig. 5. Resonant wavelength of square-diagonal antenna equals NE + ES + SW + NW.

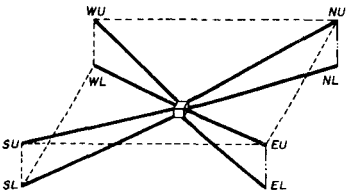

fig. 6. Resonant wavelength of box-diagonal antenna equals NU EU + EU SU + SU SL + SL WL + WL WU + WU NU.

Lay out your four, six, or eight elements side-by-side. Cut them all the same length. Connect them to their insulators using the same ties and the same length of wire. This balance is most important. An unbalance here will change your swr during pattern switching, because your elements will present different impedances to the feeders. On a box diagonal, the angular separation of elements must be identical. An error of 5 degrees will unbalance the system.

er than 66 feet, your near-in hop on 10 meters begins to suffer. A little higher, and near-in hop is reduced on 15 meters; when you go still higher, it is reduced on 20 meters. When your average, or center, elevation is below 60 feet, every few feet means a greater loss than the last few feet. You can't afford to operate below 16 feet for sheer power waste. Neither can you afford to spend money for a little better DX by increasing height to 100 feet.

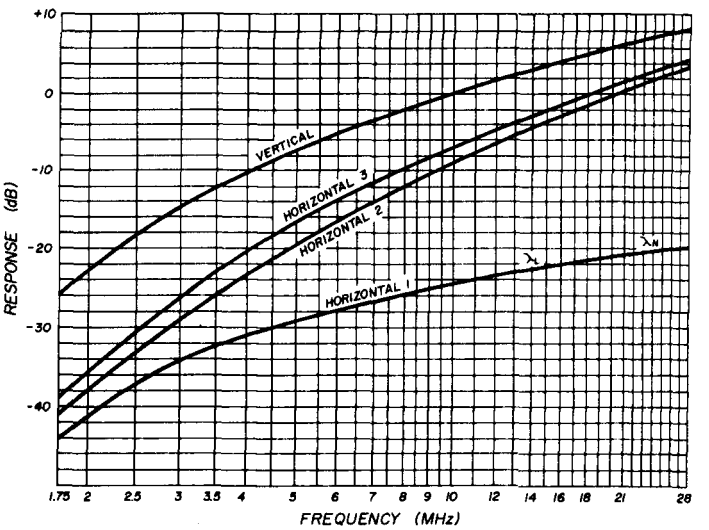

fig. 7. Comparison of two antennas; reference antenna at zero dB. Spread varies from approximately equal performance on 20 meters to about 40 dB difference on 160 meters.

wire sizes

All calculations I've seen on wire skin losses show that antenna elements or feeders smaller than pipe sizes will cause significant losses. There is, however, a diminishing return. I compromised on number 8 aluminum wire for elements and feeders on my larger antennas. On the small space dimensional (used in the tests above) I deliberately extended the number 4 wire feeders to 100 feet to eliminate loading coils through 80 meters. However, number 12 aluminum wire (used for tv grounding) should be satisfactory.

elevation

The advantages of elevation are greater for DX than for near-in hop. When you go high-

The feeder wire size should be consistent with element size. Commercial 200-ohm line is available from Federal Wire Company. However, I can't recommend it for these antennas except for low power.

I used a pair of 93-ohm RG-62/U coax cables, taped together, to feed relays without chokes, **fig. 8.** I found it too wasteful for all-band use; that is, for longer than 1/5 λ_L. The impedance is 186 ohms.

relays

There are no ideal switching relays for these antennas. You must use your ingenuity. I used up several Potter and Brumfield KT antenna switching relays whose insulation broke down from excess voltage at wavelengths beyond λ_L. My 140 watts of a-m de-

manded a larger relay, the Kurman 252C. This relay operated satisfactorily through rain and snow with the weather hood lost for two winters.

The Jennings Radio Company voluntarily furnished me with two engineering samples of their vacuum relays. These relays required no service after two more winters, but the amateur net price is over $200 per pair. They can switch any amateur power safely, even while transmitting.

The circuits I finally used are shown in **figs. 1, 2, 3** and **4.** For the cube diagonal, I have a Ledex number 250-124-256 relay that can handle only enough power for testing purposes.

The switching system for the space dimensional antenna, **fig. 4,** puts the coils of relays 1, 3 and 2, 4 in parallel. The upper antenna elements, ABC, are opposite the lower elements, DEF, in that order. A three-wire line is used for relay control. The rf chokes

fig. 8. Combination 186-ohm feeders and relay power line. This system is only suitable for very low power.

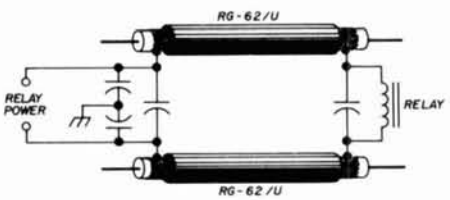

shown in the photo of the open control box are in the power leads to the relays. Plastic sleeving is used over leads between chokes and coils. These chokes prevent rf from arcing across relay coil leads. The chokes are 10 mH each. Note particularly the physical arrangement of the relays.

relay power

It is possible to power the relays with 120 Vac, but this generates noise. I've used it through my feeders; however, on dewy mornings there was an S3 power-leak noise in the receiver when the relays were energized. Conversion to 120 Vdc corrected this. A word of caution: don't use powdered iron core rf chokes. One of mine became red hot with only 100 watts input. Bypass the relay coil with an 0.01 μF ceramic capacitor to be safe. The open-wire switching system is shown in **fig. 9.** Accidental short circuits can damage a choke, because the power supply fuse won't blow. The circuit shown isn't practical for short feeders.

For my compact space-dimensional antenna, I used a three-wire cable to switch the four antenna patterns shown in **fig. 7:** horizontal 1, horizontal 2, horizontal 3 and vertical. Relay switching logic for the patterns is shown in **fig. 4.**

feeder construction

The open-wire 200-ohm line uses Reynolds Metal Company type 2B tv insulators, **fig. 10.** Protected line requires insulators every two feet; swaying line needs them every six inches minimum. Thread the insulators half way down the line from each end, using mineral oil lubricant if necessary; then space them appropriately. If the line is anchored every four feet, insulator spacing can be tripled. Losses are so low that a thousand feet can be used.

matching system

The feed point of these antennas, on the very short wavelengths, looks close to 200 ohms and has very little reactance. However, as the wavelength increases to λ_n the impedance may reach 20 ohms after passing points of over 1,000 ohms. On wavelengths

Control box for space dimensional antenna. The rf chokes prevent rf from arcing to relay coils and leads. Three-wire power cable enters box at lower right.

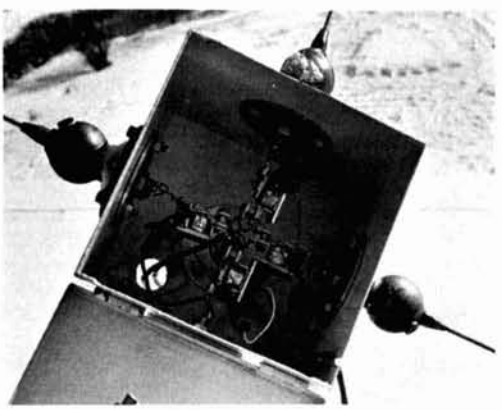

longer than λ_L, the impedance may fall to less than one ohm, and the capacitive reactance may reach hundreds of ohms. Meanwhile, the standing wave ratio can exceed 200:1 on the balanced feeders, while maintaining 1:1 on the unbalanced coax.

An open-wire line of 160 to 250 ohms impedance is optimum. The modest mismatches of the transmission line will probably produce more feeder-created reactance at the tuner feed point than the antenna displays alone, at anything shorter than λ_L. These broadbanded, low-Q low-reactance combinations are much easier to manage than the common center-fed open-wire feeder antenna systems.

tuners

To deliver all of your available power into feeders, you should use the tuner circuits I have shown, **figs. 1** and **2.** With these tuners you can always tune and load through a standing wave ratio of 1:1. With other tuners you can hit a standing wave ratio of 1:1 quite often and keep a cool tuner, but on some frequencies your tuner will not deliver much of the power to your antennas.

Don't use the tuner of Handbook X, or Handbook Y, or manufacturer Z, and then condemn the antenna as "not especially good."

fig. 9. Providing relay power through the open-wire transmission line. Iron-core chokes should be avoided; power is limited to 250 watts.

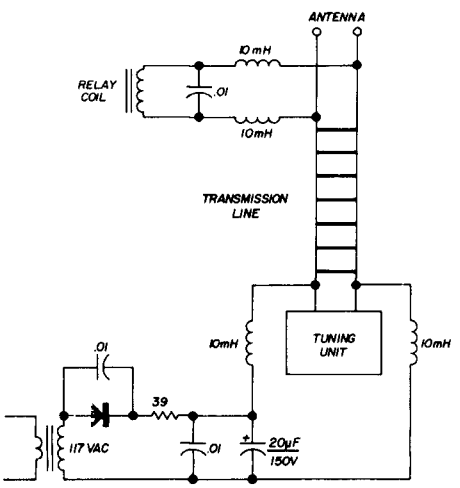

tuner values

Table 1 gives optimum tuner values for a 200-ohm resistive load. If λ_L is much greater than optimum for the bands shown, the values will still be good for the larger antennas. However, you may have to change the values somewhat with the smaller versions as you approach λ_L. At wavelengths much longer than λ_L, variations from values for L1, L3 and C1 may be large. The link values should be as shown. They are designed for 52-ohm coaxial cable.

A surprise benefit of these tuners is the small air-gap sizes of the capacitors. The parallel- and series-tuned links must safely handle rf peaks of 350 and 1000 volts, respectively, for full legal power.

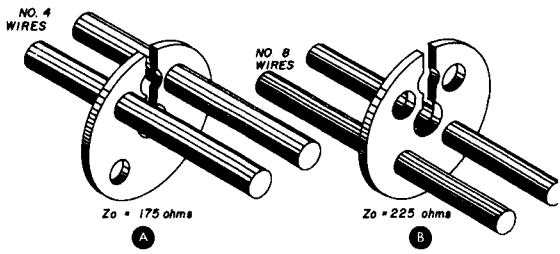

fig. 10. 200-ohm open-wire transmission line using Reynolds Metal Company's type 2B tv line insulators. If suspended in space, a spreader is required every six inches for number 8 wire; every 12 inches for number 4 wire.

Antenna tuning capacitors with a 3000-volt rf peak rating will safely handle full legal power. However, on some bands this requirement will increase to 8000 volts for a kilowatt.

The tuner-bandswitching apparatus shown in the photo has given me no trouble over the past years. I used a speaker box for an enclosure. An attempt has been made to keep the impedance constant by using braid paths equal to the center path of the coax. The coils are made of silver-plated copper wire. Intercoupling is insignificant, because coil resonant frequencies are well separated.

You'll find that a gang switch is more desirable than conventional tuner circuits. You'll have optimum tuning, coupling, and loading control at the flick of a switch. As the tuner is broader than a tank circuit, you

can listen across an entire band without retuning. Because the system is double tuned, images are down 30 to 60 dB; generally to extinction. Also, you can load your transmitter quickly anywhere near the last operating frequency on each band.

loading

If a tuner resonates but refuses to load at maximum coupling, there are several cures. You can reduce the clearance for L2, between L1 and L3; increase the number of turns equally on L1 and L3, and reduce the capacitance of C1 accordingly; or reduce the lengths of L1 and L3 by using the next smaller wire size to obtain slightly more inductance.

Proper coupling occurs when the swr passes through 1:1 with the link between one-half and fully in. If the swr goes through 1:1 before the link is one-half in, then L1 and L3 have too many turns, and C1 may arc over.

You can wind the links of number 8 solid copper wire, or 1/8-inch tubing (both silver plated, if possible), over a two-inch-diameter bottle. Space the turns about one-half conductor diameter. The links swing between the antenna coils, which are made of number 14, 16 and 18 wire.[2]

The fixed padder-type capacitors are Arco-El Menco series 30.* In parallel-tuned circuits these will handle 140 watts of a-m power. With series tuning, however, this amount of power can cause corona discharge. You can stack these capacitors, using two layers of mica in place of one. For power up to a kilowatt, double the layers of mica. This lowers the capacity, which requires more plates or additional capacitors. Caution: don't use ceramic or moulded micas; they've been known to fail.

* Allied Electronics 43A7093 through 43A7106 for 2 through 15 plates (130 through 3055 pF).

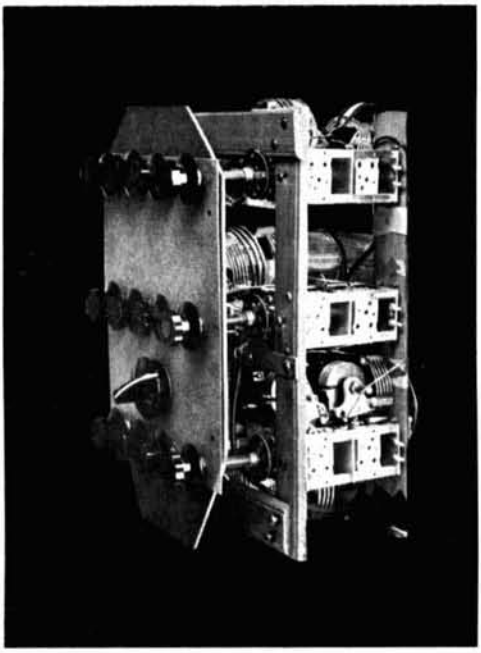

The tuner-bandswitching apparatus. All coils are silver-plated. Tuner mounts in a speaker enclosure.

link tuning

Each link is for one band only. At any frequency in the band, the link will present an insignificant reactance to the mutual coupling complex. Operating Q of the links is about three.

table 1. Component values for antenna tuners shown in fig. 1, 2, 3 and 4. L2-C2 is parallel tuned on 160, 80 and 40 meters, and series tuned on 10, 15 and 20.

amateur band	L1 (μH)	C1 (pF)	L3 (μH)	L2 (μH)	C2 (pF)
160	80	32 - 160	80	1.6	4700
80	40	16 - 80	40	0.8	2400
40	20	8 - 40	20	0.4	1200
20	10	4 - 20	10	1.6	68
15	7.5	3 - 15	7.5	1.2	47
10	5	2 - 10	5	0.8	33
6	3	1.2 - 6	3	0.5	22
2	1	0.4 - 2	1	0.16	6.8

Grid dip the links with the coil and capacitor in parallel. For final trimming, the link will indicate a dip when placed at least four inches from the grid dip meter's coil. Thereafter, the series links are opened on one side, and the coax is fed between them. The padder capacitors are never adjusted again.

To check for balanced operation, tune the receiver to a strong signal on each band. Short circuit the feeders while watching your s-meter. Signals should drop 30 to 60 dB. A drop of less than 20 dB indicates poor balance, which should be investigated.

Full-sized Bonadio antennas have low Q. When changing frequency you'll have to retune your final amplifier three times as often as your antenna tuner. However, if you use an antenna whose wavelength is longer than its λ_L you'll have to retune the antenna tuner more often.

patterns

The horizontal radiation patterns for the four- and eight-element systems are shown in **fig. 11.** For many of the shorter skip paths, the nulls will be —10 dB or less when signals are coming in at high angles. Occasional instantaneous fading differences will exceed —30 dB.

For the space dimensional, the patterns for H1, H2 and H3 are all 60-degree overlapping figure 8's. Line noise is most pronounced with the vertical pattern. Often one H pattern will decrease line noise by 20 or 30 dB. One day the BBC 21.47 MHz echo garble disappeared with an H-pattern null to the north. Later the same day, the BBC signal's flutter smoothed with an H-pattern null to the south of their normal path.

fading

The greater the DX, the greater will be the pattern change differential. On near-in hop, differences are mostly washed out by fading of the received signal, even though your contact tells you your signal has almost no fade.

You'll find that the control of fading signals is a matter of switching your patterns. If the received signal fades on pattern H1, immediately switch to pattern H2. When the H2 signal starts to fade, go back to H1, H3 or V. This is diversity reception on a one-antenna system.

You'll receive fewer reports of fading than other stations. This will be most apparent during round-table contacts, because the difference will be more conspicuous. If the received signal is also from a Bonadio antenna, selective fading will be the least of your problems. You have to experience it to believe it.

As you might expect, for DX the vertical pattern usually is equal to or better than the best horizontal pattern. However, in receiving, certain interferences may be reduced by one of the H pattern nulls, so you may find an H pattern preferable. The V pattern is helpful for quickly finding which area of DX is coming through best.

fig. 11. Horizontal radiation patterns for the space-dimensional antenna. Element switching for each of these patterns is shown in fig. 4.

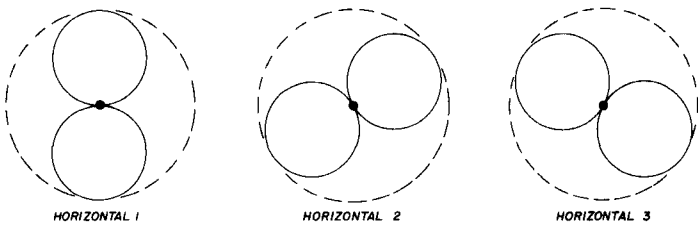

The Bonadio square-diagonal antenna is protected by U. S. Patent 3,274,606. Patents are pending on the Bonadio box-diagonal and cube-diagonal antennas; the inventor has applied for a patent on the space-dimensional antenna. This protects the inventor against commercial infringement but does not prevent an amateur from building one for his own use. **Editor**

references

1. George A. H. Bonadio, "A Survey of High-Frequency Antennas," *ham radio*, April, 1969, p. 28.
2. Illumitronic Engineering Corp., 680 East Taylor Avenue, Sunnyvale, California. Section 1800, eem file, p. 6, 7.

ham radio

solid-state exciter for 432 MHz

Here's a solid-state exciter that converts 20 mW of two-meter drive to 22 watts on 32 MHz

Hank Cross, W1OOP, 11 Birds Hill Avenue, Needham, Massachusetts 02192

In twenty-one years of operation on 432 MHz I've had nine different vacuum-tube exciters, usually driving one or more 4X150A's. The latest of these, veteran of three winning mountain-top contest operations, is an excellent example; it uses a 6AN8, 5763, two 6360's and a 4X150. Heater power is 33 watts and it requires 100 watts dc on transmit.

Presently I'm using a solid-state exciter (**fig. 1**). If it were directly crystal-controlled it would use six or seven transistors plus a varactor. Dc input power is 50 watts on transmit and it has enough output to do the same job the tube exciter did. Including vfo and power supply, it takes 5¼ inches of rack space.

vhf power stage

Before getting into any further details, lets talk about the typical vhf power-amplifier stage shown in **fig. 2.** It uses a 2N3375 operating class-C at about 144 MHz. Drive power is about one watt and output is about six watts, with a 24-volt supply (at twelve volts the power gain and power output will be about half).

The 2N3375, the most common of the overlay transistors, can be thought of as 144 type 2N706's in parallel, all assembled on a chip 1/16-inch square, with the corresponding elements hooked together by a network of evaporated-aluminum bus bars in the usual integrated-circuit manner. The collector,

the body of the chip, is gold-soldered on top of a beryllium-oxide wafer which is soldered to the copper stud for cooling. With a coral-colored aluminum-oxide top insulator and gold-plated metal parts, it looks like a piece of costume jewelry.

The base is fed from a low-impedance source. There should be an effective short circuit for harmonics of the drive frequency so that the base current can flow in short pulses. Capacitor C3, which accomplishes needed 35 ohms. Capacitor C5 should have a reactance at mid-range of about 60 ohms and L4 around 200 ohms at the operating frequency for a Q of 5 or 6.

When things are working right the load line will be approximately as shown in **fig. 3.** If the transmission line breaks or shorts at exactly the right spot, the load could become a dead short (as viewed from the collector) and the chip will melt in the time it takes twenty or thirty watts to heat 0.00004

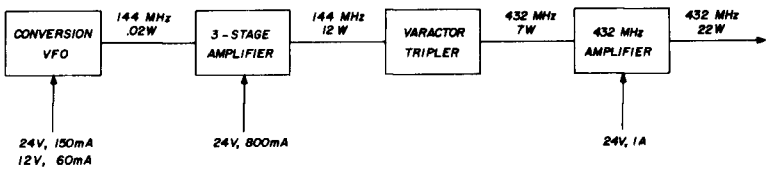

fig. 1. Block diagram of the solid-state 432-MHz exciter.

this, reduces the dc drain without affecting power output; it's handy to make it variable. The input impedance is 10 ohms or so in series with a bit of lead inductance.

To get power out with less than 24 volts peak swing, we need a load around 35 ohms. Coil L3 resonates with the transistor output capacitance, which will be about twice the rated C_{ob} value under full power (remember that capacitance changes non linearly with collector voltage). The Q of this resonant circuit is around one, so the value of L3 is not very critical. Also, the collector voltage waveform will not be sinusoidal, but rather more like an unsymmetrical square wave. Harmonic rejection is provided by the series-resonant circuit L4-C4 while C5 is used to transform the 50-ohm load down to the cubic inch of silicon four hundred degrees. A protective circuit to avoid this consequence is shown as part of **fig. 4.** It was suggested by K1BRO and is similar to one found in the RCA transistor handbook.[1]

The choke in the base circuit, L2, should be low-Q. I used a three-turn toroid wound on a ferrite bead, but several inches of fine wire wound around a 150-ohm resistor will also do the job (the resistor is in parallel with the choke, parasitic-suppressor style).

The feedthrough capacitor, electrolytic capacitor and 0.47-ohm wirewound resistor (or ferrite bead) are also important. The electrolytic should be solid-tantalum type, although ceramic or extended-foil paper capacitors as low as 0.05 μF would probably be adequate.

fig. 2. Typical class-C vhf power amplifier stage.

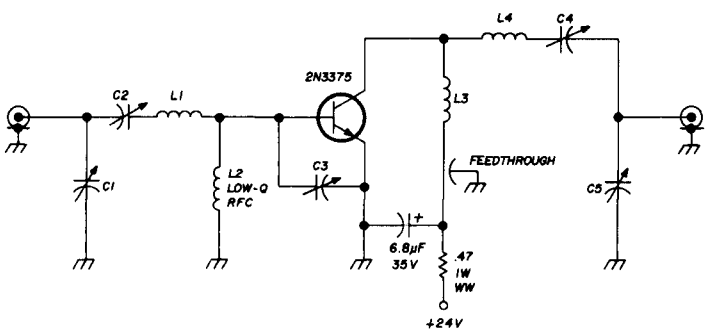

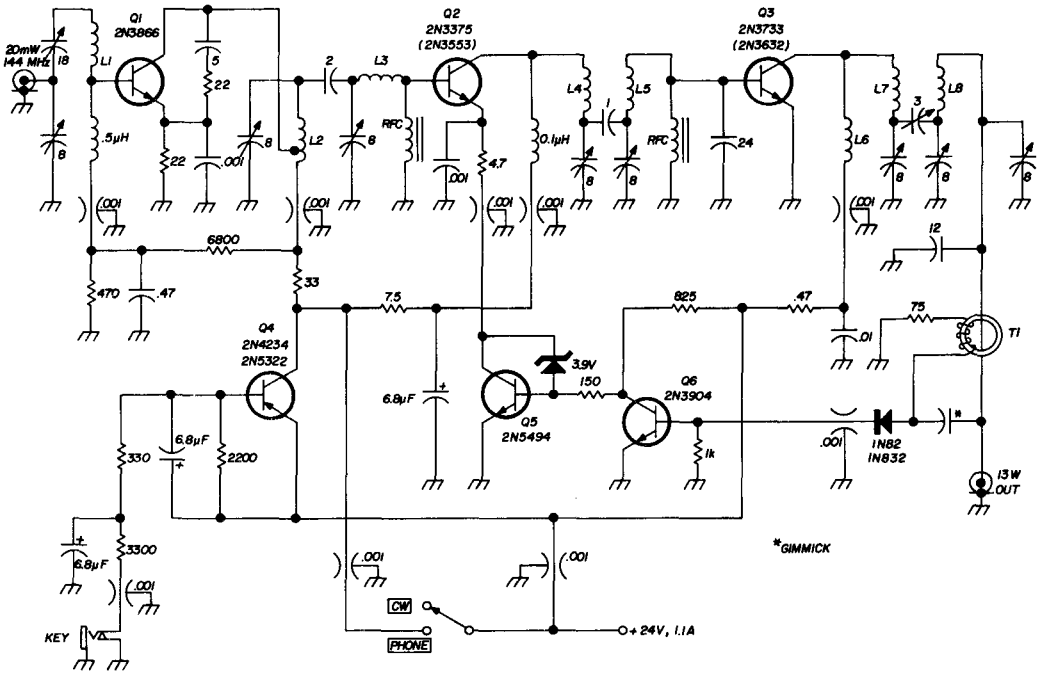

L1	**4 turns no. 20, 0.2" diameter**
L2, L3	**5 turns no. 20 enamelled, 0.2" diameter; tunes to 144 MHz with 8 pF; L2 tapped at 2 turns from cold end**
L4, L5	**8 turns no. 24 enamelled, 0.2" diameter, 0.2" long; tunes to 144 MHz with 4.5 pF**
L6	**8 turns no. 24 enamelled on a 1/4-W 100k resistor**
L7, L8	**8 turns no. 24 enamelled, 0.2" diameter, 0.2" long, tunes to 144 MHz with 4.5 pF**
T1	***Small toroid slipped over line to coax connector; 1 turn for pickup (Ferroxcube 213T060 in 4C4, 1Z2 or 1Z3 material, or Ferramic Q-3)***
RFC	**3 turns no. 26 through a ferrite bead such as 3B7 shielding bead**

fig. 4. Three-stage 144-MHz amplifier provides 13 watts output with 20 milliwatts drive. The built-in vswr detector protects the final transistor stage against serious mismatches.

Emitter grounding is a major problem; the stripline package brings out two leads at 180 degrees. **Any** emitter inductance *is* **too much.** A sixteenth of an inch will give an ohm of inductive reactance at two meters, enough to seriously affect gain or possibly result in parasitics.

two-meter amplifier

The three-stage 144-MHz amplifier is shown in **fig. 4.** The first amplifier, Q1, is operated class AB to get more power gain. The 2N3866 is very "hot" and tended to have parasitic oscillations; there are several additions to the circuit which were put in to tame these parasitics. A 2N3375 was used for Q2 because it fit my layout better than the less costly 2N3553 (for salvaged ones, the price was the same); it provides about

fig. 3. Load lines for rf power amplifiers.

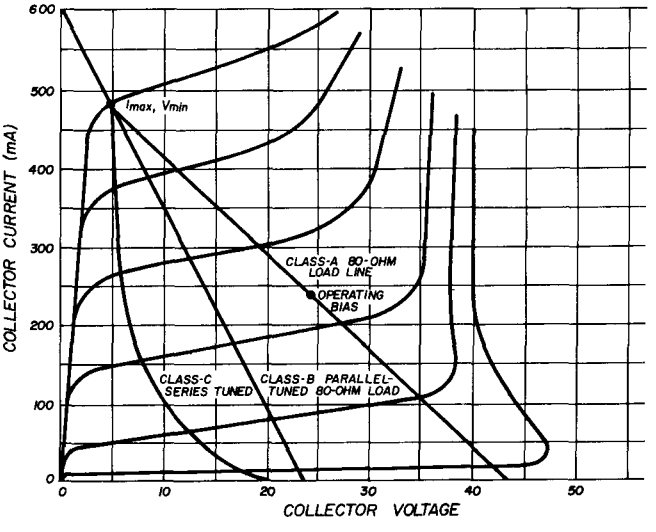

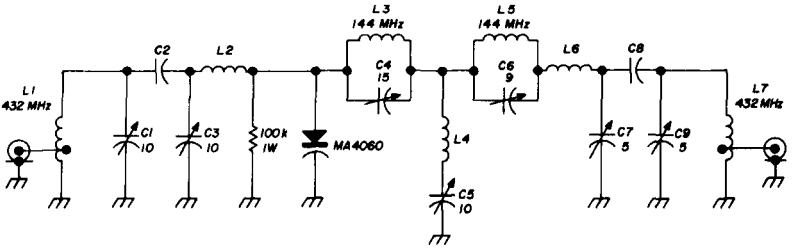

C1, C3, C5	10-pF miniature variable (Hammarlund MAC-10)	L2	7 turns no. 18, 3/8" diameter, 1/2" long
C2, C8	leads of no. 26 insulated wire, twisted together for 2 turns	L3	4 turns no. 22, 1/4" diameter, 5/16" long; tune cold to 144 MHz
C4	13-pF subminiature variable (E. F. Johnson 189-6)	L4	4 turns no. 18, 1/4" diameter, 3/16" long
C6	9-pF subminiature variable (E. F. Johnson 189-6)	L5	1-1/2 turns no. 22, 1/4" diameter; tune cold to 288 MHz
C7, C9	5-pF miniature variable (Hammarlund MAC-5)	L6	2 turns no. 20, 1/4" diameter, 1/8" long
L1	9 turns no. 18, 3/8" diameter, 1/2" long; tap at 2-1/2 turns	L7	3 turns no. 20, 1/4" diameter, 1/4" long; tap at 1-1/2 turns

fig. 5. Varactor circuit for tripling from 144 to 432 MHz.

fig. 6. The 22-watt 432-MHz power amplifier uses printed-circuit stripline inductors; material is 1/16-inch copper-clad Telite. The rfc in the base consists of 2 inches of wire airwound with an 8-32 screw as a form.

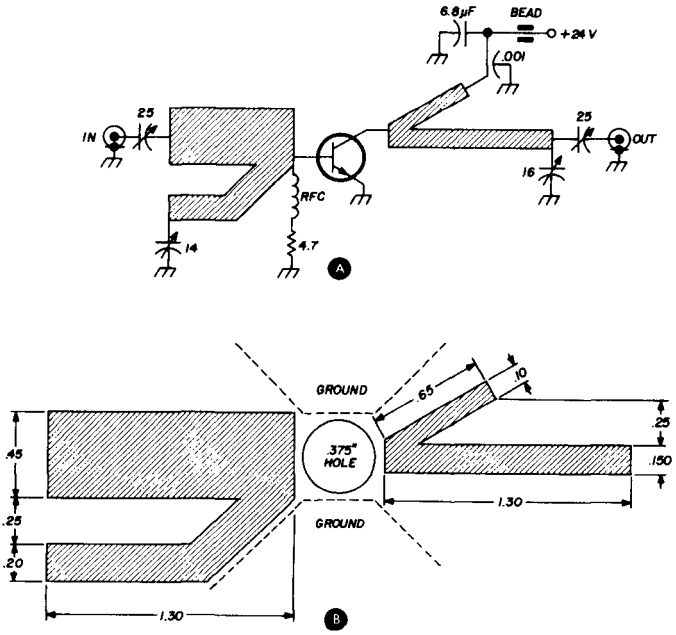

two watts output. The protective reflected-power circuit is hooked into its emitter.

Transistor Q3 was originally a 2N3375, but after blowing a couple I put in the larger 2N3733 at the same time I added the reflected-power control circuit. I guess either change would have been enough. The 2N3375, working hard, gave ten watts at slightly better efficiency than the 2N3733, which puts out twelve or thirteen watts. When tuning up at high specific power, turn the collector voltage on and bring the drive up gradually. Time constants can be set up to do that each time things are turned on.

When the reflected-power detector is working properly, the back power (as indicated on a good wattmeter) goes up to one watt and holds as the forward power is reduced to one watt with complete reflection. This means that a varactor multiplier may be tuned up with only an output power monitor (provided it's tuned to 432 and ignores 144-, 288- and 576-MHz energy). When tweaking five to seven adjustments it helps out if you don't have to watch the input matching at the same time. And if that last touch pops it out of tune, the drive transistor is protected. I first used the varactor tripler described in **QST**[2]. Then I built a

BOOKS!

Radio Society of Great Britain

RADIO COMMUNICATION HANDBOOK — Fourth Edition
A complete guide to virtually all technical aspects of amateur radio. Over 50% larger than previous editions. Prepared by the outstanding amateurs in Great Britain today. 832 pages.
Hardbound $11.95

AMATEUR RADIO TECHNIQUES — Second Edition J. Pat Hawker, G3VA
Brand new edition — completely revised. A very complete collection of short articles and ideas covering many aspects of amateur radio. Includes new enlarged semiconductor section. 160 pages.
Only $2.50

AMATEUR RADIO CIRCUITS BOOK
Completely revised — new edition. A very handy collection of many useful circuits for amateur use. Loaded with good ideas for that new converter, exciter or other project you are working on.
Only $2.00

RADIO DATA REFERENCE BOOK — Second Edition — By G. K. Jessop, G6JP
Here in a 148 page book is one of the most complete compilations of radio and electronic charts, nomographs, formulas and design data available. Whether you design, build or operate, this is a book you must have.
Only $2.50

WORLD AT THEIR FINGERTIPS — John Clarricoats, G6CL
A very interesting history of the RSGB and of amateur radio in Great Britain. It gives a great insight into the development of our hobby.
Paper back edition $2.50
Deluxe edition $6.50

Other Important Volumes

RADIO HANDBOOK — 17th Edition
How to design, build and operate the latest types of amateur transmitters, receivers, transceivers and amplifiers. Provides extensive, simplified theory on practically every phase of radio.
848 pages Only $12.95

ALL ABOUT CUBICAL QUAD ANTENNAS by W6SAI
Construction and tuning data. Multi-band Quads. Charts, drawings and photos for your Quad. Full complete data on homemade Quad antennas. The new X-Q Quad.
$3.95

VHF HANDBOOK by Orr W6SAI & Johnson W6QKI
First complete Handbook covering the VHF spectrum! Many VHF construction projects. Design and construction of VHF transmitters, receivers and antennas! Make your VHF station work!
$3.75

THE CARE AND FEEDING OF POWER GRID TUBES by Robert Sutherland, W6UOV
Just as the title says, a very complete rundown on the use of power tubes. Be sure to read this before you start work on your new linear.
Only $3.95

BEAM ANTENNA HANDBOOK by William Orr, W6SAI
New edition. Theory, design, construction, and the installation of rotary beam antennas! SWR data! Multi-band beams, 40 meter beams, 20 meter DX beams! How to make your beam work! 200 pages.
$3.95

NOVICE & TECHNICIAN HANDBOOK by W6SAI and W6TNS
All about amateur radio in non-technical language! How to learn the code. How to assemble your ham station. Transmitters! Receivers! DX! How to get QSL cards.
$2.95

ELECTRONIC CONSTRUCTION HANDBOOK by Robert Lewis, W8MQU
All about design - construction - layout and testing of electronic equipment. Non-technical guide for kit-builders and your best key to better performance of your equipment!
$2.95

Postpaid in USA & Canada

comtec

Box 592 · Amherst, New Hampshire 03031

similar one in a smaller box to fit the space available. The circuit is shown in **fig. 5.**

432 amplifier

The six or seven watts of 432-MHz output from the varactor is applied to a stripline amplifier **(fig. 6)** built according to information provided on the RCA-TA7344 data sheet[3]. The transistor I am using is a Fairchild developmental unit (TBLO504) rated for 25 watts output at 400 MHz with a 28-volt supply. I'm getting 22 watts at 432 MHz with a 24-volt supply. Other suitable types are the 2N5177 (TRW), MM1551 (Motorola), or TA7344, 2N5016 and now extinct 2N5017 (RCA). I am not using any mismatch protection in this stage at present.*

conclusion

So far, we have a carrier source. This might be used to drive a high-level mixer for sideband operation; it will work by itself on cw (a keyer is shown) or for a-m we can modulate the final 4X150. I don't think that a satisfactory linear sideband amplifier chain can be made to the ten-watt level with present transistors because of problems with linearity and thermal runaway, but devices to solve these problems will be on the market in a year or two.

For a-m operation on two meters, look at the data sheets for the RCA 40290, 40291 and 40292. The 40292 appears to be a 2N3632 at a reduced price, rated for a-m operation with a 14-volt supply. There are other types also designed for this sort of service. There are not any comparable 400-plus-MHz types that I am aware of, although I know that several manufacturers are making 225-400 MHz a-m transmitters for aircraft service. I'd probably learn a lot from an appropriate technical manual.

* Late note: I should have—I just blew the transistor!

references

1. "50-MHz, 40-Watt CW Transmitter with Load-Mismatch Protection," RCA Transistor Manual SC13, 1967, p. 504.
2. Henry H. Cross, W1OOP, Frequency Multiplication with Power Varactors at UHF," *QST*, October, 1962, p. 60.
3. RCA RF Power Transistor data sheet, developmental type TA7344, April, 1968.

ham radio

MEET THE NCX-1000 TRANSCEIVER... THE NEW DESKTOP POWER PACKAGE FROM NRCI

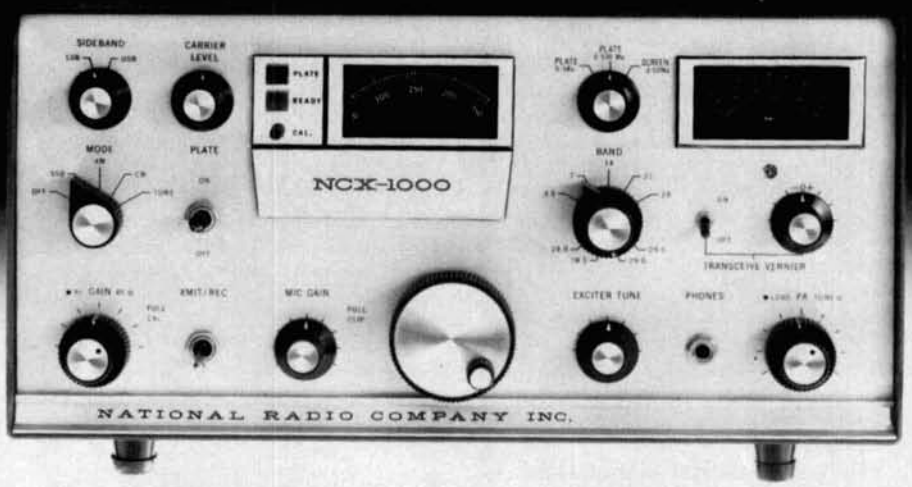

NRCI's compact new happening puts you on the air with *complete* SSB, CW, and AM coverage of the 80 through 10 meter bands. There's a lot in it for you, including built-in AC power supply and monitor speaker. Check these features, and you'll see this is the rig to stay with!

- 1000 Watts PEP on SSB, 1000 Watts CW, 500 Watts FSK, 500 Watts AM.
- All-solid-state except for driver and PA.
- Built-in RF speech clipper.
- Wide-range fast attack/slow decay AGC.
- Receive Vernier with separate on/off control.
- Suggested amateur net price, $995.

For complete (and impressive) specifications and details, write:

NATIONAL RADIO COMPANY, INC.

NRCI 37 Washington St., Melrose, Mass. 02176

© 1969, National Radio Company, Inc.

International Marketing through:
Ad Auriema, Inc., 85 Broad St., New York, N.Y. 10004

calculating received power in a radio communications link

A detailed analysis of just what happens to the hard-earned watts from your transmitter

Jim Ashe, W1EZT

The essential element in any radio communications link is the connection between some distant transmitting antenna and a receiving antenna. Perhaps you've never thought of a "connection" through space, but such a connection nevertheless exists.

The purpose of this piece is to analyze the radio frequency energy propagation problem and demonstrate how you can estimate the amount of power your antenna will pick up from a given transmitter, or to put it another way, the amount of input your receiver must have for effective reception.

approach to the problem

Such an estimate can be very helpful in choosing equipment to be purchased, planning a station design, or thinking about whether or not you want to try some tough new project. Maybe someday you might want to design an rf link between two sites. Or perhaps you're thinking about moonbounce or space communications.

As I reviewed the basics required for such work, I was very surprised to discover how simple it all is, **if approached properly.** Basically, received power questions are just another circuit problem, except we have to deal with power traveling through space as well as through wires and transmission lines. Space has only a few basic physical and geometric properties that are always the same, except near large stars. But that kind of space is likely to be far outside our experience for years to come. Let's now consider why received power and receiver performance questions sometimes seem difficult.

the rf spectrum

Historically, people haven't been working very long with radio signals that behave in a simple manner below the ionosphere. The most-used frequencies have been below

about 100 MHz. Radio signals don't behave at these frequencies in the straightforward manner of those in space. The frequencies we're interested in at present cover a wide range, amounting to five decades, with a lower limit of about 10 kHz. It's informative to consider the physical aspects of the radiating medium with which we must work at the frequencies of interest. The following summary presents the general characteristics of antennas in the entire rf range.

under 3 MHz

Antennas are electrically short and usually reactive. Elaborate grounding is required. Antenna input resistance is low, requiring a matching network; yet the antenna is physically large.

3 MHz to 30 MHz

Antennas are a large part of a wavelength in size, and grounding becomes optional. Input resistance is easily matched, and a structure that is electrically large is physically manageable. Some directivity can be achieved without mechanically huge, electrically phased systems.

30 MHz to 300 MHz

Antennas can be made in dimensions of a few wavelengths. Grounding is usually of no importance except for lightning protection. New kinds of antennas and wideband structures begin to appear. Very sharp directivity becomes possible along with high gain.

300 MHz up

Real variety appears in antenna designs. Some structures use optical techniques and resemble optical devices. Mirrors and lenses appear. Apparently strange means of carrying rf include the G-string and waveguide techniques. Antenna bandwidths may be measured in octaves, yet the antennas are very directive. At frequencies in the gigacycle region, complications begin to exist in such areas as the physical size of water droplets, which approach a wavelength in dimension.

The natural laws apply to all these antennas; however, there are so many differences it's somewhat surprising to recall that most involve practical problems of mechanical size and engineering. A waveguide, for example, would certainly work at 80 meters but would be huge, expensive, and impractical. A top-loaded, tenth-wavelength radiator with several downleads appears equally improbable at vhf.

Although our one field of antenna engineering has the appearance of several, I have chosen wavelength (or frequency) as the only variable in my analysis of the rf energy transit problem.

propagation modes

The communications engineering field is further complicated by the four basic classes of rf propagation. We have surface and space waves as pure types, ground and sky waves as the varieties we actually find at low frequencies, and a catch-all department for the multiple and once-unsuspected vhf modes discovered since 1940. Let's examine the characteristics of the rf propagation modes.

surface wave

Propagation of the radio signal is along the ground, suggestive of a one-sided waveguide. Propagation efficiency depends, in part, on ground characteristics, with sea water being least lossy.

space wave

Propagation is in straight lines through space—the simplest possible condition. Propagation through the atmosphere sometimes closely resembles space-wave propagation.

ground wave

Surface and space wave combine as they propagate at low frequencies. A vertical radiator is preferred with the bottom end well grounded.

sky wave

This is a low-frequency space wave as observed under conditions in the atmosphere. It must be low enough in frequency for reflection from the ionosphere. Under good conditions it may reflect from the ionosphere and ground several times before weakening to inaudibility.

vhf modes

If there were no atmosphere, vhf signals could be heard beyond the horizon only by diffraction scattering. This will be the case for explorers on the moon. In air various effects include scatter, TEM, auroral reflection, inversions, duct propagation and sporadic-E.

Suppose we have a long-distance radio link between New York and, say, London, Florida or Australia. A few of the factors that must be considered include:

1. Transmitting and receiving antenna properties, including grounding.
2. Path orientation in earth's magnetic field.
3. Daylight or darkness along path.
4. Season.
5. Solar activity.
6. Immediate atmospheric ionization.

Any experienced radio amateur could add entries and detail enough to fill the page, and a professional communications engineer could probably write a book on the subject.

If this description doesn't make estimating received signals a black art for super computers, here are still other factors: antenna orientation relative to the incoming signal; the relative phases of signals arriving by alternate routes; whether signals are polarized linearly or circularly; and their orientation or sense of rotation.

Finally, there is the competition of the received signal with external and receiver noise. Your receiver may provide excellent output from a weak signal on the bench, but connected to the antenna it also brings in 60-Hz harmonics from the millions of noise machines in cities, atmospheric noise at the lower shortwave frequencies, other amateur stations, and often strong interference from improperly tuned commercial broadcast, propaganda and jamming transmitters. At very high frequencies, the incoming signal must compete with thermal and atomic noise from the universe.

Now that I have made this sound like a practically impossible problem, I'll devote the rest of the article to an explanation of how satisfactory solutions to the radio-link problem may be worked out with fifth-grade arithmetic. Some tenth-grade algebra will be of assistance in the more difficult cases, and the key ideas are of roughly the same level of difficulty. Our approach will depend upon key points.

The first is: **accuracy** is not required. Twisting a knob or two on your receiver will throw in gain or loss fudge factors of a thousand or so per knob, and your receiver's agc control is comparably effective. A signal-strength estimate off by 10 or 20 dB will still be very useful and tremendously better than a guess or no estimate at all.

Secondly, if you do come out wrong, your **notes** will help set things right with least effort, since records and experience combined will frequently inform you just how much improvement is needed and where it can be made most easily.

Thirdly, you probably don't appreciate the really tremendous **inefficiencies** your system can have and still work. Normal communications systems commonly deliver larger amounts of signal power than are really needed. This brute-strength advantage is almost unavoidable under normal operating conditions, unless you're working with very, very low power. Take a note from the low-power amateurs, who cover hundreds of miles on milliwatts. Modern required-power estimates, based on ordinary shortwave experience, are misleading because of the terrific competition you expect from other hams, commercial stations and radio frequency noise.

Finally, although the over-all problem is complicated indeed, **the elements can be attacked one at a time.** We can do this in a style resembling elementary accounting: if we can grasp one key point, the rest of the solution will follow.

power

What is it that goes from power supply to transmitter, to transmitting antenna, through space, to receiving antenna, and at last to the receiver? It's power. Voltage and current merely indicate the presence of the power, and calculations with these quantities

represent avoidable detail. If we confine our attention to the really basic central matter of power, we can trace the power through its entire route and analyze each factor causing a change in power level. The power at the end of the journey is fed into the receiver. Let's imagine we are examining a transmitting system.

fig. 1. Classic principle for measuring watts per square meter.

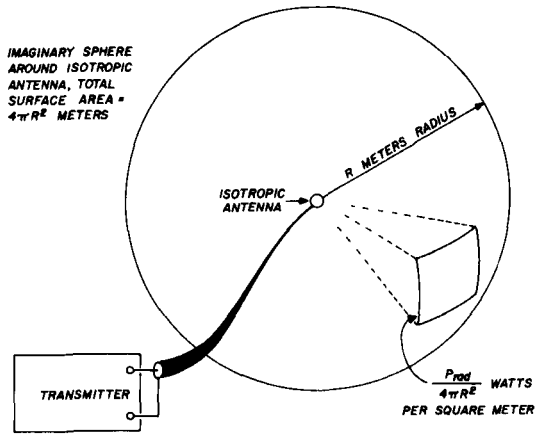

transmitting through an isotropic antenna

We open our attack on the question of received power by imagining we have a transmitter connected to an isotropic antenna. The antenna efficiency is 100 percent. By definition, the power is radiated equally in all directions. There is no such thing as a real isotropic antenna you can hold in your hand, just as you can never manufacture an equivalent circuit to observe the real circuit it represents. Isotropic simply means, "equal properties in all directions," a very convenient imaginary property. All directions would receive equal amounts of rf, or lack of it, if you are a vhf enthusiast inclined to view things from a perspective of large-array behavior.

Now let's go to the anodes of the transmitter output tubes. This is where our dc input power is converted into rf power. The quantity of rf generated may be a little uncertain, but simple voltage and current measurements will give an excellent power input figure. We can use this, as a first approximation, by assuming some reasonable efficiency figure, say 60 percent.

The newly manufactured rf power starts off to the antenna, but not all of it arrives. Some is lost in the transmitter output circuit, and some heats up the transmission line or antenna. The remainder is radiated into space.

Handbook research, careful measurements, ballpark measurements, or just plain thinking can yield values for the losses, which we can describe as unwanted resistances. We're interested in these estimated values because we want to reduce losses, and because even though we may be only estimating sometimes, a carefully thought-out estimate is far better than one that comes off the top of the head.

Now, let's suppose our transmitter input power is 100 watts, an rf-ammeter indicates about 1.1 amperes into a 50-ohm line, and our swr meter indicates zero reflected power from the isotropic antenna. What can we do with this?

Current into a nonreactive, properly terminated transmission line relates to power without a power-factor correction. Therefore I^2R equals about 61 watts going out to the antenna. Call it 60 watts. We can assume a loss resistor in the transmitter, whose influence is appropriate to 26 ohms. Part of this resistance is derived from the power tubes, and the rest resides in the matching network. We may wonder about antenna loss resistance, but typically this is quite small, and for now we're assuming an isotropic antenna anyway. So at this point we have about 60 watts going out into space, and our thinking about its origin would work for any other transmitter, whether tube, transistor or varactor output stage.

the radio-frequency space wave

A large proportion of the engineering difficulties found in real-life work and briefly listed earlier are related to sky- and ground-wave propagation behavior, which becomes decreasingly important as we increase transmitter frequency into the ranges used for space communications. If we suppose there is no propagation other than by space wave,

these complicating factors disappear, yet we still have a usable way of looking at things. We'll choose the simplest workable approach, and when we understand it, we can always fit in some more factors if we feel the need. For now I'll ignore them completely.

Suppose our transmitting antenna is placed inside a huge balloon, or a perfectly nonreflecting sphere many wavelengths in diameter (see **fig. 1**). No interaction will occur between the sphere and the isotropic antenna at its center. Knowing the radius of the sphere, how do we estimate how much rf is striking any part of it?

We choose a system of dimensions first. I prefer to work in meters, because this system is more convenient than the English system, and because we already reckon wavelengths in meters. This will be convenient later, when we come to receiving antennas. You may find it handy to remember a yard is 10 percent shorter than a meter, or that 10 meters very nearly equals 11 yards.

Our sphere has a radius of R meters. A quick reference to a handbook tells us a ball of R meters radius has a surface area of $4\pi R^2$ square meters. Knowing that each square meter of the ball's inside surface receives an equal amount of rf power, we write a quotient for watts per square meter. It comes out as $P_{rad}/4\pi R^2$ watts per square meter, where P_{rad} is the total radiated power in watts.

The sphere is required only as a convenient mental image to remind us how we obtained this watts-per-square-meter result. We can say R represents range rather than radius. Now we can reckon the power striking a square meter of area at any distance, using the same equation. For example, suppose we move out to 10 miles from our isotropic antenna, still radiating an estimated 60 watts. We have a sheet of paper 1-meter square, or about 39.4 inches on a side, and we face it directly towards the transmitting antenna. How much rf is striking it?

A mile is about 1600 meters, so the range is 16,000 meters (see **fig. 2**). The result is 1.9×10^{-8} watt per square meter striking one square meter. At one-half the distance the incidence power would be four times greater; at three times the distance nine times less, etc.

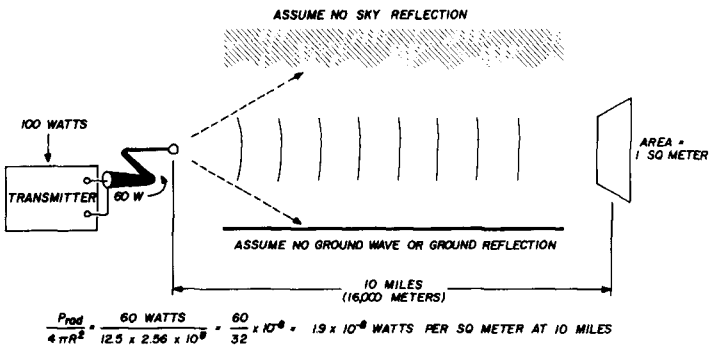

fig. 2. Estimating the space-wave power level at a specific distance. (Note several simplifying assumptions.)

receiving through an isotropic antenna

Now consider the question of how much power can be collected and fed to the receiver. To avoid complexities arising from antenna properties, imagine another isotropic antenna connected to the receiver. How much power will the isotropic antenna intercept?

Since we know the field strength in watts per square meter, we only need know how many square meters of capture area the antenna effectively presents to the incoming wave. A useful list[1] shows the effective capture area of an isotropic antenna to be 0.08 square wavelength. Converting this to meters, and multiplying by watts per square meter, provides our estimate of power available to the receiver antenna terminals (see **fig. 3**).

For instance, suppose our 100-watt transmitter, situated 10 miles away, is operating at a wavelength of 2 meters. Our isotropic antenna at 0.08 square wavelength has an effective capture area of 0.16 square meter, so that it delivers 1.9×10^{-8} watt per square meter, times 0.16 square meter, or about 3.03×10^{-9} watt to the receiver. This completes our computation by the detailed method of received power if we know transmitter power and range and use the simplest possible antennas. The approach I've used so far is a very good one to understand, but in real life it's rather slow and clumsy and doesn't yield results in the most meaningful form.

fig. 3. Estimating received power.

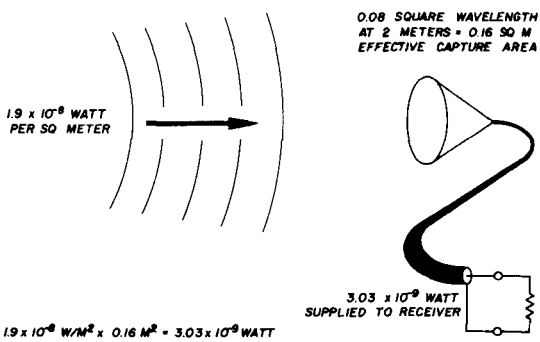

computing power using decibels

The decibel system often seems confusing, because too many writers neglect to mention their standard unit of power or voltage. Another difficulty arises when we forget that dB numbers represent ratios. When we add dB's we use a shorthand method for multiplying the ratios. For instance, zero dB may look a little odd until you remind yourself it means output equals input, rather than output equals zero. Decibel values of various ratios are contained in many engineering books. Ballantine's handy dB/Ratio conversion slide rule is even better, and I used mine for the dB calculations appearing a few paragraphs below.

Every power transformation or loss factor in our transmitter-receiver system from power supply to power-tube anode, to transmitting antenna, to space, to receiving antenna, and finally to the receiver terminals, can be expressed as a ratio. The transmitter efficiency is P_{out}/P_{in}, the watts per square meter is expressed by $P_{rad}/4\pi R^2$, and so on. Each of these can be expressed in its dB value. The result of all these multiplications and divisions is obtained by adding algebraically all positive and negative values. Since the received signal is much weaker than the transmitted signal, the negative values have to win by a sizable margin. Let's work out our transmitter-receiver problem using dB's.

Here it is again for convenience:

1. 100 watts dc input.
2. 60 percent efficiency.
3. Wavelength 2 meters.
4. Isotropic transmitting antenna.

Ten miles away another isotropic antenna is connected to a receiver. Orientation of isotropic antennas is not important. How much rf input power is fed to the receiver antenna terminals?

Since we're talking about power, we'll choose a standard power level. This is 1 milliwatt. We're not concerned with circuit impedances or with ac, dc or frequency. I'll avoid the usual reference standard difficulty by using the term dBm to refer to all power levels. Plus values represent powers greater than 1 milliwatt; minus values represent power levels between zero and 1 milliwatt. We start with dc power at the tube anodes.

Meter voltage and current readings indicate 100 watts input, which is plus 50 dBm. Some is lost in the transmitter, with theory and experience suggesting an efficiency of 60 percent. 100/60 equals 1.67. Referring to our dB rule, we find this is a loss of about 2.2 dB. At this point our power level is reduced to plus 47.8 dBm. This is the power radiated into space.

Since I want to get the same result by dB calculation as by the direct method, I can't throw in any new loss factors. But if we wanted to include an efficiency of 86 percent for the antenna, we would take off another 1.1 dB. I'll pass that by this time, however.

At this point we have plus 47.8 dBm going into space. Our filling-all-space geometry brings in the $1/4\pi R^2$ factor, which consists of a constant $1/4\pi$, and a $1/R^2$ range factor. The $1/4\pi$ is a fixed minus 11 dB, and the range factor requires a manipulation deserving close attention. To calculate the dB value of $1/R^2$ for 16,000 meters, we separate the range number into two parts, convert the parts to dB values, add these, then double the result to represent the squaring. That is, $1/16{,}000^2$ equals $(1/16 \times 1/1{,}000)^2$. Ballantine's handy rule gives us minus 12 dB for the 1/16, and minus 30 dB for the 1/1,000. The sum is minus 42 dB. Doubling this brings it to minus 84 dB. (This is simply calculating with logarithms.) Now our power calculation is plus 47.8 dBm radiated, minus 11 dB geometry factor, minus 84 dB range factor. This yields minus 47.2 dBm per square meter at the receiving antenna.

Our isotropic receiving antenna has a capture area of 0.08 square wavelength times a wavelength of 2 meters, or 0.16 square meter. Our Ballantine rule converts this to minus 8 dB. Minus 47.2 dBm per square meter, minus 8 dB for effective capture area, adds up to minus 55.2 dBm fed to the receiver. If the capture area had been 1 square meter, we'd have used 0 dB here for minus 47.2 dBm at the receiver, etc.

table 1. The "accounting" method for finding received power.

parameter	effective power gain	effective power gain
transmitter dc input power	50 dBm	
transmitter efficiency (60 percent)		—2.2 dB
transmission line efficiency	0 dB	
antenna efficiency	0 dB	
antenna gain over isotropic	0 dB	
spherical geometry factor		—11 dB
range factor		—84 dB
propagation factor		0 dB
isotropic antenna capture area gain (frequency dependent)		—8 dB
antenna gain over isotropic	0 dB	
antenna efficiency	0 dB	
transmission line efficiency	0 dB	
receiver input efficiency	0 dB	
	50 dBm	—105.2 dB

check calculation:
50 dBm — 105.2 dB = —55.2 dBm (accounting method)
3.03×10^{-9} watts = —60 dBm + 4.8 dBm = —55.2 (geometry method)

table 2. Estimates of receiver input power from several antennas.

antenna system	receiver input power (dBm)	equivalent voltage across 50Ω load (μV)
isotropic	—55.8	360
2 dipoles at 2.2dB/ dipole	—51.4	600
dipole transmitting antenna/2.2 dBi	—40.4	2100
plus Yagi receiving antenna/13.2 dBi		
Yagi transmitting antenna/13.2 dBi	—31.4	6000
plus colinear receiving antenna/11.2 dBi		

Note: dBi stands for dB gain over isotropic antenna

It's laborious and confusing to try to work out all calculations in the broken-up style I used to try to present these ideas. If we take a hint from the bookkeepers we see this is exactly an accounting problem. We can rearrange it in the neat, concise style of **table 1.** This arrangement offers instant comprehension. It is especially valuable in experimental work where you may be looking for the best way to increase received power. See **table 2** for a sample analysis of results achieved by changing antennas. Such an investigation on paper can be carried out with the assistance of a few simple tests to improve your perspective on actual system performance in your location. You should expect to save many tens of dollars and hours of hard work. Perhaps you can find business applications for it too, with tv applications at the head of the list.

reference

1. "Reference Data for Radio Engineers," IT&T, 4th ed., p. 750.

Now SEE the HQ-215 Mk-II

The Hammarlund HQ-215

The solid state receiver for those who want to be one-up

New Radio — New Price

At your distributor now

The Hammarlund HQ-215 brings to amateur radio a fully transistorized receiver offering a new high in sensitivity, selectivity and drift-free operation. Revolutionary unitized I-beam construction coupled with modularized design provides an unusually high degree of electrical and mechanical stability. A unique carousel dial with 22" of frequency calibrations means easy reading and resetability to within 200 cycles. And the [illegible] operation gives you [illegible] peak operating [illegible]. Here are the facts:

FREQUENCY COVERAGE: Complete ham band coverage, 80-15 meters; 28.5 — 28.7 mcs on 10 meters. Provision for 13 optional crystals providing 200 kc segments from 3.4 — 30.2 mcs built in.

FREQUENCY READOUT: Visual dial accuracy is ±200 cycles on all bands.

FREQUENCY STABILITY: Less than 500 cycles per hour.

I-beam construction for strength

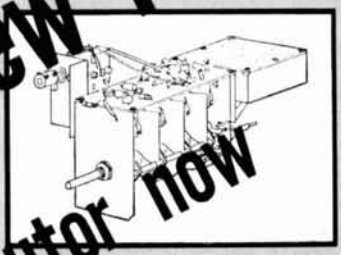

Modularized for electrical stability

TRANSISTORS: 26 transistors, 13 diodes and Zener regulator diodes.

SELECTABLE FILTERS: 2.1 kc mechanical filter supplied. Plug-in space for two optional filters. Any filter may be switch-selected from front panel.

MODE: Selectable USB, LSB, CW, OR AM.

SERVICE: SSB, CW, AM, and RTTY.

SENSITIVITY: Better than 0.5 microvolt for 10db signal-to-noise ratio.

SELECTIVITY: SSB-2.1 kc mechanical filter, 2:1 shape factor.

DIMENSIONS: Size: 6.8" H x 15.8" W x 14" D.

WEIGHT: 21 lbs.

$399.99
S215 Matching Speaker
$24.95
Suggested User Net

Established 1910

The **HAMMARLUND**
Manufacturing Company Incorporated
A subsidiary of Electronic Assistance Corporation
73-88 Hammarlund Drive, Mars Hill, North Carolina 28754

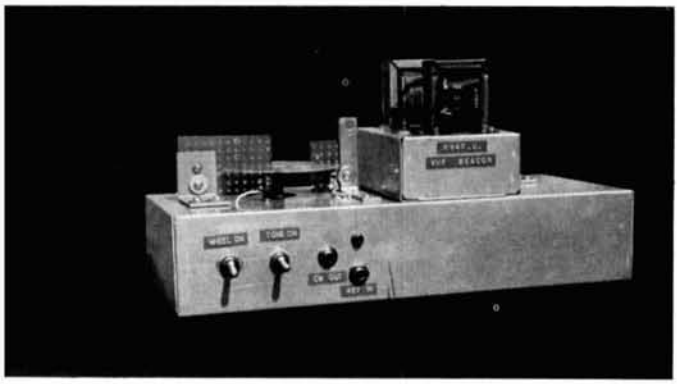

an automatic two-way dx beacon for vhf

Simple method to ensure that you'll be there during band openings

Bob Cooper, Jr. KV4FU/K6EDX

Operation on the vhf bands for the serious DX enthusiast is lonely at best when he's separated by some distance from others with similar interests. Located as I am in the Virgin Islands, some 1100 miles from the mainland, I used to spend a lot of time listening to antenna noise—until I built the DX beacon described in this article.

With 50-MHz conditions building up to a sun-spot cycle 20 peak, I'd been giving some serious thought to how I could be sure that, when the band was open, I would be **listening.** Often I could get on the air if I knew when to be there. Many times I'd be listening, and the other fellow would be listening, but we'd listen right through the opening because we heard nothing. Clearly, I needed something that would make noise (transmit) and alert me when my transmission attracted someone else's attention.

I'd just completed the DX beacon described here when I got into a round table discussion with two other "vhf hermits," OA4C and CE3QG, both of whom had also given some thought to the problem. All of us wanted a beacon to attract attention, but none of us had a ready supply of parts. In each case, the resulting beacon was built from what was on hand. OA4C used what he calls a "promotion motor" to energize his transmitter. (It was promoted from a local

liquor store display for beer.) CE3QG used a tape loop. These approaches are discussed later.

My system is a little more complex than either of the other two. I built it around a spare 6C4 tube I had on hand and the other not too pretty but serviceable components shown. The KV4FU system is described in some detail; those of OA4C and CE3QG in a general way. Whichever approach you take, chances are you will modify it to suit available parts.

KV4FU system

The secret of making the package **two-way** is to use the vox circuit in your ssb transceiver or transmitter. My basic system is shown in **fig. 1.** The code message is etched onto a wheel made from a phenolic board. A 1-rpm motor rotates the wheel past two fixed contact fingers. The center finger makes contact with a copper ring etched around the center of the wheel. The second finger contacts the etched code characters around the periphery of the wheel. The make-or-break circuit carries an 800-Hz sine wave output from an audio generator, which is fed through a bandpass filter. This signal drives the transmitter (or transceiver) through the vox circuit. My message, shown in **fig. 1,** lasts 35 seconds. The remaining portion of the wheel is blank, which is a 25-second listening period. After the "K" is transmitted, the vox circuit returns the transmitter to the receiver mode. This is when other stations can call or make noise to alert me of their presence.

code wheel construction

I made my code wheel from a 4 x 6-inch single-sided phenolic board (phenolic on one side only).* The code characters can be made with EZ Etch pressure-sensitive transfers, or you can use 1-point and 2-point ruleline tape, which has an adhesive backing. This is available in art supply stores.

Lay out your message in pencil. After scribing the circle for the wheel with a compass, center the copper ring for the fixed contact. Etch the code characters, then cut out the wheel circle with a jig saw or coping saw. Drill a hole exactly in the center for a press fit onto the motor shaft.

* Available from Amidon Associates, 12033 Otsego Street, North Hollywood, California 91607. They also handle EZ Etch products.

keying mode

Since you are keying an ssb transmitter with an audio note, the transmitter input will be single-tone audio and not pure cw (depending upon the method used to generate cw in your particular unit). The **purity** of the audio note originating in your 800-Hz audio generator will, to a large measure, determine what your beacon sounds like at the other end. Take care not to overdrive the audio input of your transmitter with the relatively high output levels available from most audio generators (i.e., don't flat top your cw).

I have experimented with leaving the 800-Hz audio bandpass filter out of the system with varying results. When the distortion products from the audio generator are held to levels 50-60 dB below the 800-Hz output, there's no need for the audio bandpass filter. In my own receiver, however, the unwanted (lower) sideband is still present and objectionable, although it is at least 45-50 dB below my desired (upper) sideband transmitted signal. A slightly less-pure 800-Hz audio output produces a combination of cw and mcw,

The KV4FU DX beacon. Contact fingers for code wheel are attached to phenolic boards mounted at right angle to wheel. Slit in boards provides track for wheel.

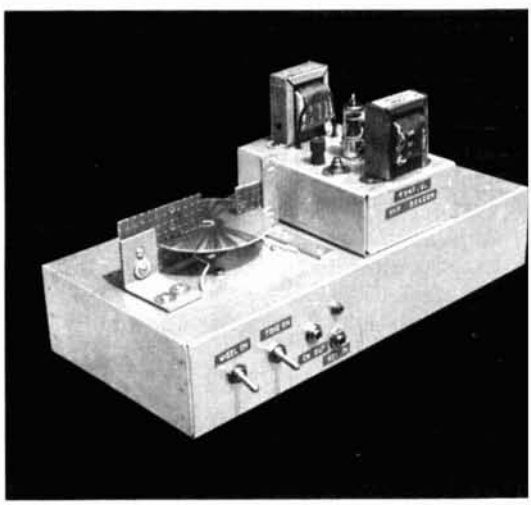

which makes it possible for stations without a bfo to copy your beacon. (Some stations in South America are still so equipped on 50 MHz.)

When the signal is quite strong, audio notes will be present next to the 800-Hz signal and probably won't contribute to your communications range or win you compliments from those hearing your signal. When signals are weak, the cw portion (driven by the stronger 800-Hz note) will probably be all the distant station will hear.

the audio generator

The circuit I use is shown in **fig. 3.** The audio output transformer, L1, is a Stancor A7949 whose 2000-ohm primary is the series element in a pi network. The secondary is not used.

I chose 800 Hz because I had some surplus toroid filters on hand, and this frequency complemented the cw operation of my Swan 250 transmitter. The Swan's cw signal is generated 800 Hz above the receiver listen frequency, and a station hearing my beacon and zero beating with another Swan 250 (let's face it—there are a lot of them around) will also produce an 800-Hz audio note in my receiver. Your choice may be different for similar reasons.

The response of the surplus filter is quite good. A scope showed sidebands of 750 and 850 Hz to be down 30 dB or more. The 1968 edition of the ARRL handbook (pages 50-51) contains data on building your own filter.

power supply duty cycle

Some attention should be given to the duty cycle of your transceiver power supply if you intend to run extended operations with your beacon. Exact data on the Swan 117XC duty cycle is not available to me, but it appears that a 25 percent duty cycle does not overtax the unit. I operate on transmit mode 60 percent of the time, but I transmit only a portion of this period. The end result is that my key-down time is 25 percent of each minute. I have experienced no difficulties with the Swan 117XC.

vox circuit adjustment

The vox circuit delay control should be adjusted so that the transmitter stays on the transmit mode (i.e., remains keyed with resting current present) between characters. This will ensure that you don't clip the leading edge of characters and distort the sound of your cw.

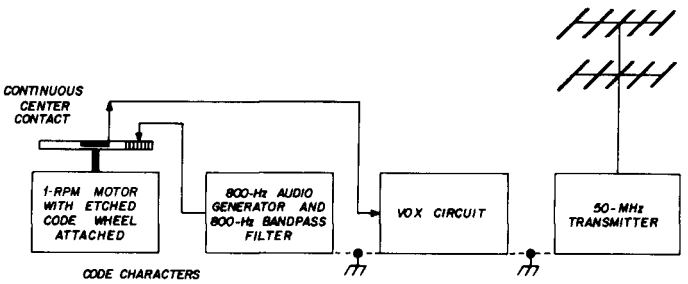

fig. 1. Block diagram of KV4FU vhf DX beacon. Microphone input to transmitter is driven through vox circuit via code wheel, which keys audio generator output.

rf feedback

You might experience some problems with transmitter rf getting back into the audio generator system and keying circuit. I found it necessary to physically remove the audio generator code wheel about six feet away from my 50-MHz final amplifier to prevent rf distortion of the audio keying signal. The code wheel output is coupled to the audio input jack on the Swan 250 through a shielded microphone cable. (A transistorized audio generator had to be enclosed in a shielded box and a copper screen built around the code wheel in a second unit I constructed. For this reason, the tube unit shown here is now in use, because it was less susceptible to rf overload.)

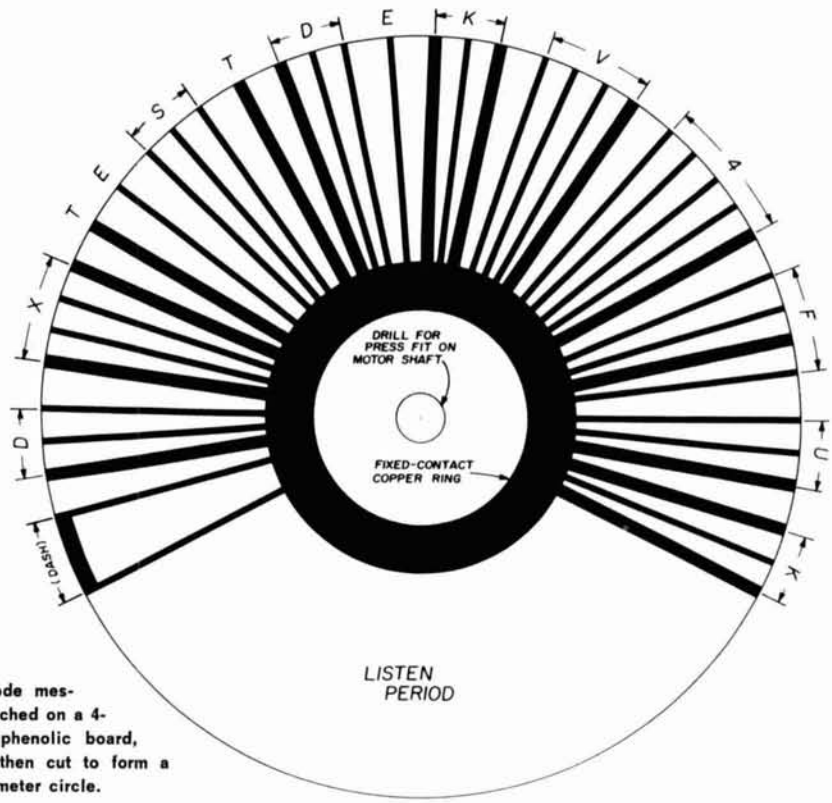

fig. 2. Code message is etched on a 4- x 6-inch phenolic board, which is then cut to form a 4-inch-diameter circle.

The photos and diagrams should provide adequate explanation for anyone interested in duplicating my DX beacon.

CE3QC and OA4C approaches

The CE3QC method of accomplishing the same objective is similar, and OA4C has already updated CE3QG's method with another step.

CE3QG prerecorded his beacon message on an audio tape loop which consists of "(dash, dash) CQ TEST CE3QG TEST CE3QG." The tape loop is recorded in mcw, and the audio output from the playback head on the recorder drives his Swan 250 VOX circuit. One advantage to this method is that beacon messages can be changed quickly to suit his needs without having to etch a new code-wheel board. The delay period and timing can also be changed at will.

OA4C liked this idea and expanded upon it by including an aural CQ on his tape interspersed with his cw message. He sends (on cw) "CQ CQ DE OA4C," followed by "CQ

The completed code wheel. Characters can be made with pressure-sensitive transfers or tape available at art supply stores.

SIX METERS FROM OCEAN ABLE FOUR CHARLIE LIMA PERU" on ssb.

Heinz, OA4C, also has a band watching mechanism that alerts him when signals appear on the 50-MHz band. He has only one other local, OA4BR, who cooperates by not falsely triggering Heinz's warning system. Here is how it works.

the OA4C band watcher

Heinz' "promotion motor," which is ac operated and self reverses its shaft rotation

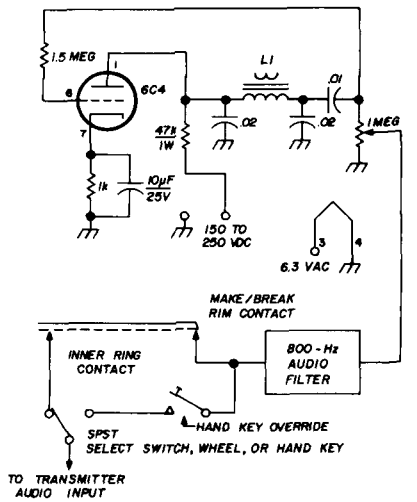

fig. 3. DX beacon audio circuit. Output transformer is Stancor A7949 primary (2 kilohms); secondary is not used. Audio bandpass filter is surplus kit.

after one complete revolution, is connected to his receiver tuning dial through a gear arrangement. The motor remotely tunes his receiver plus or minus 50 kHz from center frequency. He places his microphone in front of the receiver speaker, sets his vox sensitivity circuit so that any received signal will key the vox, and throws a spst switch that disables the transmitter vox relay control. This allows the vox relay to ring a bell. When he hears the bell, he knows a DX signal is on the band, and he hotfoots it back to the shack.

are beacons really necessary?

Many years ago numerous 50-MHz beacons were on the air. Industrious amateurs put them on to warn of DX conditions, and the beacons ran almost continuously. As activity grew through sunspot cycles 18 and 19, the beacons slowly left the air on the theory that with much activity one didn't need a beacon to tell one when the band was open.

This is all well and good for DX openings via the E layer within the Continental United States. However, anyone who has ever listened to commercial signals just below (or within) the 50-MHz band during periods of high muf via the F layer will tell you that the band is open for hours on end but amateur signals are not present. The need for beacon activity both inside and outside of the Continental United States has never been greater. As CE3QG, OA4C and others will tell you, stateside 49-50 MHz signals are often heard, but with no signs of amateur activity.

A similar case exists for two-meter E-layer DX. The construction of a vox-controlled beacon for two-way vhf activity overcomes the old bugaboo about beacons being continuously run and the operator transmitting right through a DX opening when he should have been listening. With such an installation, more contacts will result, even in times of short-period openings and rapidly changing conditions.

Vox-controlled ssb transceivers abound on both six and two meters. In just a few hours you too should be able to put your own beacon on the air. And listen for mine on 50.1028!

ham radio

"If you'd read "ham radio magazine" carefully, you'd know you heat the wire and not the solder, dear."

TOP OF THE YAESU LINE

THE FT DX 400 TRANSCEIVER

Conservatively rated at 500 watts PEP on all bands 80 through 10 the FT dx 400 combines high power with the hottest receiving section of any transceiver available today. In a few short months the Yaesu FT dx 400 has become the pace setter in the amateur field.

FEATURES: Built-in power supply • Built-in VOX • Built-in dual calibrators (25 and 100 KHz) • Built-in Clarifier (off-set tuning) • All crystals furnished 80 through the complete 10 meter band • Provision for 4 crystal-controlled channels within the amateur bands • Provision for 3 additional receive bands • Break-in CW with sidetone • Automatic dual acting noise limiter • and a sharp 2.3 KHz Crystal lattice filter with an optimum SSB shape factor of 1.66 to 1.

Design features include double conversion system for both transmit and receive functions resulting in, drift free operation, high sensitivity and image rejection • Switch selected metering • The FT dx 400 utilizes 18 tubes and 42 silicon semi-conductors in hybrid circuits designed to optimize the natural advantages of both tubes and transistors • Planetary gear tuning dial cover 500 KHz in 1 KHz increments • Glass-epoxy circuit boards • Final amplifier uses the popular 6KD6 tubes.

This imported desk top transceiver is beautifully styled with non-specular chrome front panel, back lighted dials, and heavy steel cabinet finished in functional blue-gray. The low cost, matching SP-400 Speaker is all that is needed to complete that professional station look.

SPECIFICATIONS: **Maximum input:** 500 W PEP SSB, 440 W CW, 125 W AM. **Sensitivity:** 0.5 uv, S/N 20 db. **Selectivity:** 2.3 KHz (6 db down), 3.7 KHz (55 db down). **Carrier suppression:** more than 40 db down. **Sideband suppression:** more than 50 db down at 1 KHz. **Frequency range:** 3.5 to 4, 7 to 7.5, 14 to 14.5, 21 to 21.5, 28 to 30 (megahertz). **Frequency stability:** Less than 100 Hz drift in any 30 minute period after warm up.

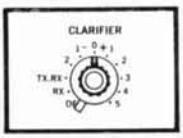

CLARIFIER CONTROL — Does the work of an external VFO — allows operator to vary receive frequency 10KHZ from transmit frequency, or may be used as an extra VFO combining transmit and receive functions.

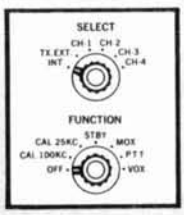

SELECT CONTROL — Offers option of internal or outboard VFO and crystal positions for convenient preset channel operation.

FUNCTION CONTROL—Selects crystal calibration marker frequency and desired transmit mode of operation.

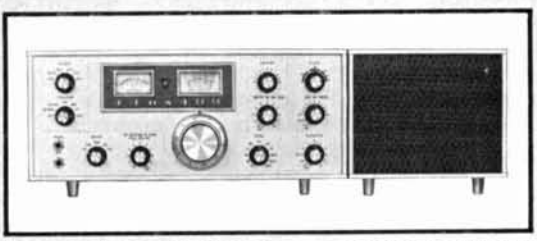

FT DX 400 $599.95 — SP-400 $14.95

SPECTRONICS BOX 356, LOS ALAMITOS, CALIFORNIA 90720

— PROFESSIONAL EQUIPMENT FOR THE AMATEUR —

high-linearity voltage controlled crystal oscillator

Peter Laakmann, WB6IOM, 8001 Airlane Avenue, Los Angeles, California 90045

While working up plans for a special weak-signal receiver with precision calibration, I needed a stable vco (voltage-controlled oscillator) that could be tuned over a small frequency range—10 kHz at an output frequency of 28 MHz. The oscillator had to have good voltage-vs-frequency linearity as well as crystal stability. With good linearity the frequency could be controlled with a ten-turn potentiometer; the ten-turn dial would then read frequency at the rate of 1 kHz per revolution, and setting repeatability would be better than 10 Hz with calibration accuracy of 50 Hz.

The weak-signal receiver is not finished yet,* but it will use direct conversion of the 28-MHz i-f signal to audio using ssb phasing techniques for image rejection. The vco feature is needed for automatic search modes and phase-lock inputs:

The voltage-controlled crystal oscillator (vcxo) worked so well I decided to describe it separately since there are many applications for such a unit. It could be used as the master oscillator for a vhf transmitter (resulting in considerable tuning range of the output frequency) or it could be used to generate wideband fm in a vhf transmitter or fsk in a lower frequency unit. These are all applications that are difficult to accomplish with conventional techniques if extreme carrier stability is required.

The electronic tuning of a vco permits some interesting tuning concepts for receivers and transmitters. For example, more than one dial can be used with a vco, and the dials can be switched electrically. With this arrangement the vco can "remember" a particular tuning position, or it can be tuned off frequency with the second dial. In a transceiver a vco can provide independent tuning for either transmission or reception. In a moonbounce system a vco can be used to remove Doppler shift from the expected echo by changing vco frequency by the expected Doppler shift between reception and transmission.

the vcxo

This oscillator is designed around a crystal that has a series-resonant frequency at 14 MHz. Crystal frequency can be shifted with good linearity over a range of plus or minus 10 kHz at 14 MHz. My application only calls for ±2.5 kHz deviation at 14 MHz; over this range linearity is within 0.25 percent. From my experiments with this circuit it appears possible to shift the frequency as much as 30 kHz.

The vcxo is temperature compensated and has a frequency stability of 2 Hz per degree centigrade. Temperature compensation is required because the frequency is influenced by circuit parameters other than the crystal. Stable operating voltages are also required for the same reason. Stability of the completed vcxo is better than the best LC oscillators by at least an order of magnitude; **fig.**

* Author WB6IOM promises a complete rundown when the receiver is complete.

1 shows frequency vs temperature, operating voltage and control voltage.

Output level of the circuit is 1 Vrms sine-wave into a capacitive load of 10 pF. The output circuit is **not** designed to operate into a 50-ohm load because this would increase power dissipation inside the unit and cause undesirable warm-up effects.

The circuit settles right down when the frequency-control dial is reset—frequency changes are instantaneous. Warm-up drift is about 10 Hz, with stabilization to 1 Hz within 10 minutes. The oscillator will stay within

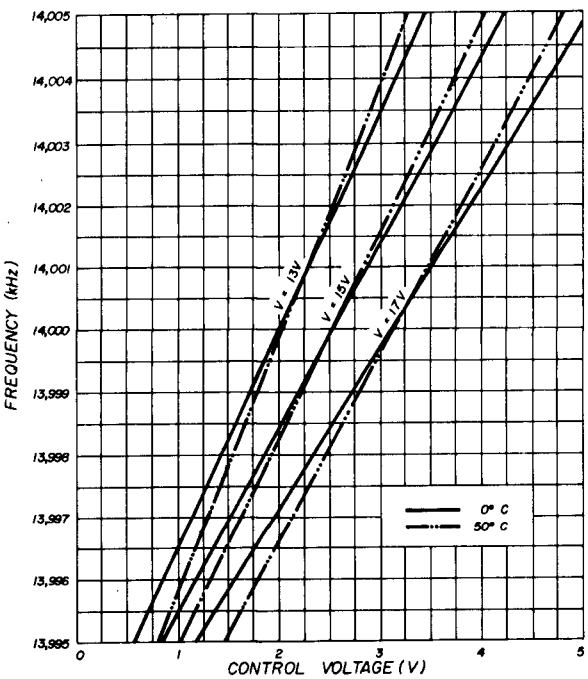

fig. 1. This curve of vcxo frequency characteristics illustrates the excellent linearity and voltage and temperature characteristics of the unit.

1 Hz for hours in a normal room-temperature environment as measured with a digital counter.

operation

The circuit shown in **fig. 2** uses the crystal in a series-resonant mode between a common-base stage (Q1) and a common-collector stage (Q2). While it might seem that the impedances of both stages are quite low, the crystal actually sees the impedance of the emitter resistors rather than that of the transistors. This is because the amplifiers are not operated class A due to the large amount of loop gain that is available. The large loop gain causes the oscillation amplitude to build up to a level where the transistors are cut off for a considerable portion of the cycle.

The series-resonant impedance of the crystal is approximately 10 ohms, so the large series emitter impedance reduces the effective crystal-circuit Q by a factor of 100 or more. The reduction of crystal Q allows amplifier phase shift to change the frequency of oscillation. Most of the initial amplifier phase shift is produced by the large collector resistance of the common-base stage and its collector-to-base capacitance. This causes the frequency of oscillation to be lower than crystal resonance.

The variable capacitance of the 1N4452 diode produces a variable phase shift that can raise or lower the frequency of oscillation. Although this diode is not characterized as a varactor it is used as one in this circuit. I have used many of these diodes in various applications as harmonic multipliers. Typical minus 6-volt cutoff frequency is 20 GHz. Zero-bias capacitance is typically 30 pF; at 20 V it is a few pF. Other diodes with similar parameters will probably work too, although regular switching diodes do not work.

In this circuit the diode is forward biased over part of the rf cycle; the control voltage varies the conduction angle of the diode. This probably explains the exceptional linearity. As soon as the control voltage is raised above the point where the diode current goes to zero, linearity rapidly deteriorates.

At high forward diode currents the oscillator frequency is below the resonance of the crystal because of the large phase lag in the common-base stage. At low diode currents (high control voltage) the average capacitance of the diode increases the effective crystal resonant frequency. Oscillator frequency is then above the crystal resonant frequency.

Since the collector resistance of the com-

mon-base stage controls phase shift, changing its value with temperature can effect the temperature compensation of all other temperature-sensitive elements in the circuit. This is accomplished by the unijunction transistor (Q4) series resistor combination that shunts the collector load resistance. The base diode of the unijunction transistor is not connected. A "Sensistor" will do the same job but it is more expensive and is essentially the same piece of silicon anyway. I suspect that each oscillator needs to be compensated individually; the 12k series resistor can be varied to compensate properly any oscillator. More about this under the section on tuneup.

I used 2N2369A transistors but any other high-speed switch or amplifier type should work equally as well. The output stage is an emitter follower. This stage does not provide complete isolation of frequency from load variations but is sufficient for most uses.

construction

The oscillator is constructed in a small metal box, 1½ x 1½ x 2½ inches, that is completely closed to maintain a uniform temperature. Dc voltages are brought through feedthrough filters. Output is from a BNC fitting. The oscillator can drive a few inches of coaxial cable without much loss in voltage. All resistors used in the prototype are ⅛-watt metal film types. These provide long-term stability.

tuneup

There should be no problems with crystal activity in this circuit since feedback is quite large. The linear tuning range can be centered around the desired center frequency by varying the common-base collector load. Decreasing the 12k series resistance to the unijunction transistor will increase the temperature sensitivity of the load resistance and can be used to obtain exact temperature compensation for a particular control voltage. Temperature compensation will then be close enough at either end of the tuning range.

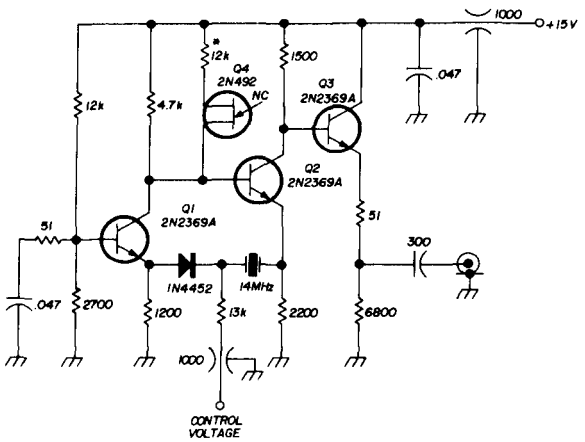

fig. 2. Schematic for the voltage-controlled crystal oscillator. The 12k resistor in series with the unijunction transistor is used for temperature compensation. The crystal is a CR-19/U type available from Texas Crystals.

Decreasing the 13k resistor in series with the control voltage will yield increased tuning range toward lower frequencies. Decreasing the 4.7k collector resistance of the common base stage is the only variable available to control the high end. If the oscillator is used with higher supply voltages, slightly more tuning range may be obtained.

The oscillator should be used with a stable power supply. The temperature compensation of the oscillator assumes that the power supply used has a near zero temperature coefficient of voltage. If the power supply is located in the same thermal environment it can, of course, be included in the thermal compensation of the oscillator. Ripple on the power supply must be less than a few hundred microvolts, particularly on the control voltage line.

ham radio

550 Big Watts!

The GT-550 by GALAXY

Based on the proven Galaxy V Mk 3 design . . . the GT-550 comes on stage with an entirely new look. And under this beautiful new exterior Galaxy has packed 550 watts . . . the highest powered unit in its field. Henry Radio, always the first with the best, is proud to introduce this fine piece of equipment along with an equally fine line of accessories.

Come on in, look them over. Or write or phone. We'll send you detailed specifications.

GT-550,	550 watt transceiver	$475.00
AC-400,	AC Power Supply, 110/230 VAC, includes cables	$ 89.95
G-1000,	DC Power Supply, 12/14 VDC, Neg. Ground	$125.00
RV-550,	Standard Remote VFO provides dual frequency control for GT-550 only	$ 75.00
RF-550,	3000/400 watt Wattmeter/Antenna Selector (Available after April 1)	$ 69.00
SC-550,	Standard Speaker Console, 5 x 7 speaker 8 ohm, (AC-400 will mount inside)	$ 25.00

Henry Radio has a great antenna package program . . . big savings. Write for literature.

EASY FINANCING • 10% DOWN OR TRADE-IN DOWN • NO FINANCE CHARGE IF PAID IN 90 DAYS • GOOD RECONDITIONED APPARATUS • Nearly all makes & models. Our reconditioned equipment carries a 15 day trial, 90 day warranty and may be traded back within 90 days for full credit toward the purchase of NEW equipment. Write for bulletin.

TED HENRY (W6UOU) **BOB HENRY** (WØARA) **WALT HENRY** (W6ZN)

CALL DIRECT . . . USE AREA CODE

Henry Radio Stores

Butler, Missouri, 64730		816 679-3127
11240 W. Olympic, Los Angeles, Calif., 90064		213 477-6701
931 N. Euclid, Anaheim, Calif., 92801		714 772-9200

"World's Largest Distributor of Amateur Radio Equipment"

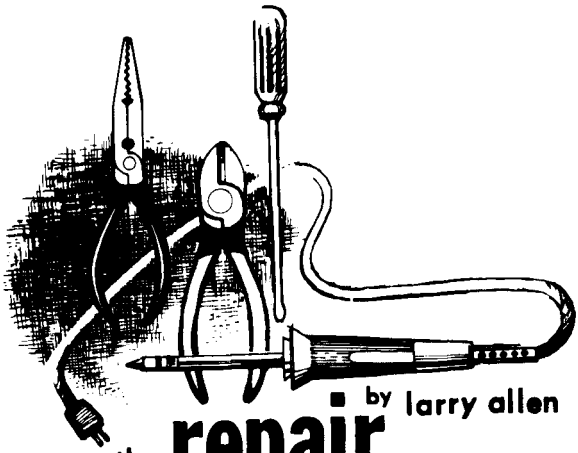

the repair bench

by larry allen

tuning up ssb transmitters

On a quick look, tuning up a single-sideband transmitter may appear about the same as tuning any other kind. But when you try it, you'll find there are some considerable differences.

In fact, a complete ssb tuneup is something suited more to the bench than to the working shack. A full ssb tuneup is really an alignment job. There are critical adjustments to be made. Fortunately, once made, these screwdriver or transformer-slug adjustments can be left alone as long as the set works okay. You don't have to change them every time you change bands or frequencies.

The chief trouble most hams run into in aligning an ssb transmitter stems from not really knowing what each step does. If everything happens according to the book, okay. The trouble is, not everything does. It's then that knowing and understanding determines how the job turns out. This background of know-how and know-why is what I plan to bring you this month. Then you'll be at ease with the nuts and bolts of ssb transmitter alignment I'll tell you about next month.

ssb band-changing

Remember that the main carrier oscillator in an ssb transmitter does not determine output frequency. You can see why in **fig. 1.**

The carrier oscillator generates its signal at a fixed frequency—sometimes 455 kHz, and in transceivers, usually around 5 or 9 MHz. This signal has only one purpose: creating sidebands. The voice signals need some kind of carrier to beat with in the balanced modulator. Otherwise, no sidebands or difference frequencies would be generated.

The output of the balanced modulator is a double-sideband supressed-carrier (dsbsc) signal. The two sidebands contain all the voice modulation, in rf form of course. One sideband is just above and the other just below the carrier frequency.

Then the dsbsc signal is sent through a special filter that allows only one sideband to pass. The output of that filter is a single-sideband signal. It contains all the rf modulation components that were formed on one side of the carrier.

However, in today's equipment, the so-called carrier that is mixed with voice signals to form sidebands is never at the same frequency as the output of the ssb transmitter. With only one signal frequency, the balanced modulator and side-

band filter can be designed for optimum results at that frequency. It would be difficult and expensive to change so many tuned circuits every time you shift transmitter frequency. Tuning up each time would be complicated and time-consuming.

Instead, frequency in a modern ssb transmitter is determined **after** the single-sideband signal is formed. Usually, it's done by a heterodyne method. This is also explained in **fig. 1.**

The ssb signal from the sideband filter is mixed with a cw signal from a master vfo. If the transmitter operates at vhf, there is also likely to be some frequency multiplication between the vfo and the frequency converter stage where the signals are mixed.

The ssb signal and the vfo signal heterodyne and create sum and difference signals. If you figure them out, you'll know that makes a sideband above the vfo frequency by the amount of the original carrier frequency, and another below by the same amount. If the frequency converter is a simple mixer, the output also contains the vfo signal; if it's a balanced mixer, the vfo signal is canceled in the output.

The two new sidebands are quite far apart. If the carrier oscillator is 455 kHz, for example, the two sidebands are 910 kHz apart. Any fairly selective tuned tank can pick out one sideband and eliminate the other quite easily.

The remaining single sideband goes to the antenna. If more power is needed, the signal is amplified first in a linear power amplifier.

alignment fundamentals

Obviously, changing the output band involves only the tuned circuits that **follow** the frequency converter—even if the transmitter has two converters. You switch the tuned tanks. If the band change is from an hf to a vhf band, you might also switch in a multiplier stage after the vfo.

Changing frequency within a band is only a matter of retuning the vfo. You may have to make minor tuning adjustments in the tank circuits that follow the frequency converter. If the transmitter setup includes a linear amp, chances are you tune it up only when changing bands; it's broadbanded.

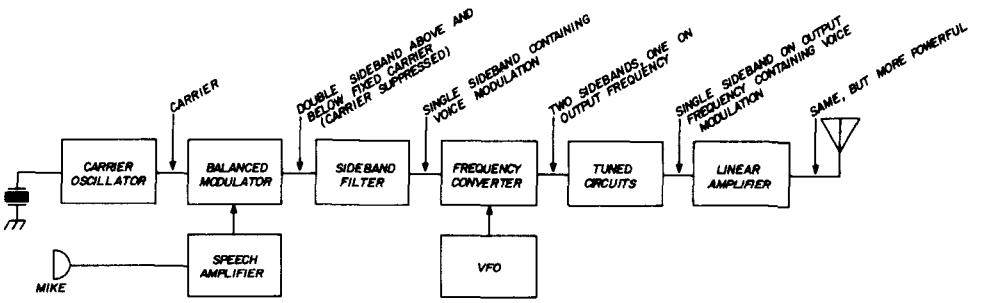

fig. 1. Output frequency of single-sideband transmitter depends on heterodyning already-formed sidebands with signal from vfo, which develops a sideband at transmitting frequency.

However, there are important adjustments to be made periodically if you want to maintain top performance, adjustments that come under the heading of alignment. The balanced modulator is the most critical of these. It must be balanced perfectly to cancel the carrier signal effectively. This entails only two or three adjustments, but they must be accurate and correct. The steps vary from model to model, but their goal is inevitably the same: to suppress the carrier as much as possible.

Sometimes minor—but touchy—adjustments must be made in the vfo. Aging

components and the wear of regular use eventually bring on tuning errors. Alignment restores dial accuracy.

Even stages following the frequency converter have some servicing-type adjustments that need periodic attention. Bias for the linear amplifier is important to operation and to tube life. Some rf stages need neutralizing. Each band usually has separate adjustments that "center" the tuned tanks of the rf output circuits.

peculiarities in transceivers

Certain transceivers use one or more receiver i-f stages to amplify the sideband signal before it reaches the last frequency converter. That ties receiver alignment in with transmitter-adjustment peaking. So, you must align the receiver first. An example of this kind of unit is the partial block diagram of a Hallicrafters transceiver in **fig. 2.** Only the connections to the receiver stages are shown.

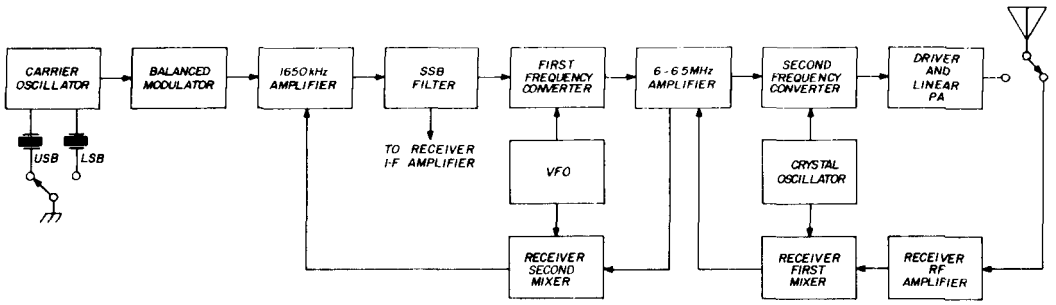

fig. 2. Transceiver uses some of receiver i-f stages to amplify transmitter signals at various stages of frequency conversion. Sideband generated in balanced modulator is heterodyned up to the output frequency.

In the receive mode, the first superheterodyne conversion changes incoming single-sideband signals to intermediate frequencies between 6.0 and 6.5 MHz. The oscillator that feeds that first receiver mixer is fixed-frequency (the same crystal oscillator that feeds the transmitter **second** converter). The signals are amplified by a broadband (6.0–6.5 MHz) i-f amp.

Then they're mixed with a signal from the variable frequency oscillator. Its tuning picks out the one signal you want and converts it to 1650 kHz. From that second mixer, the signal is amplified and fed through a narrowband filter to eliminate any nearby frequencies that might have slipped past the 1650-kHz tuned circuits. Then it's amplified again, detected, and so on. That's the receiver.

Two i-f stages of the receiver are used in the transmit mode, too. Study **fig. 2.** The carrier oscillator uses two crystals, one to generate upper sideband (usb) and one to generate lower (lsb). The usb crystal is at 1652.8 kHz; the lsb crystal is at 1650.0 kHz. The output of the balanced modulator is a pair of sidebands above and below whichever frequency has been selected by the usb/lsb switch.

Bandpass of the 1650-kHz amp is broad enough to pass both sidebands at either frequency. The filter that follows, a crystal-lattice type, has a very sharply defined response. It passes frequencies from 1650–1653 kHz, sharply rejecting any above or below. So, if the usb crystal is chosen, the sideband filter picks out the **difference** or lower sideband from the two generated in the balanced modulator (it's later converted to an upper sideband of the output frequency). If the lsb crystal is chosen, the filter selects only the **sum** or upper sideband of the modulated carrier. The carrier itself is suppressed in the balanced modulator.

The one-sideband signal from the filter is fed directly to a transmitter frequency converter. There it mixes with a tunable signal from the vfo. Again, the sidebands are produced at sum and difference frequencies—the 1.650-MHz sideband mixing

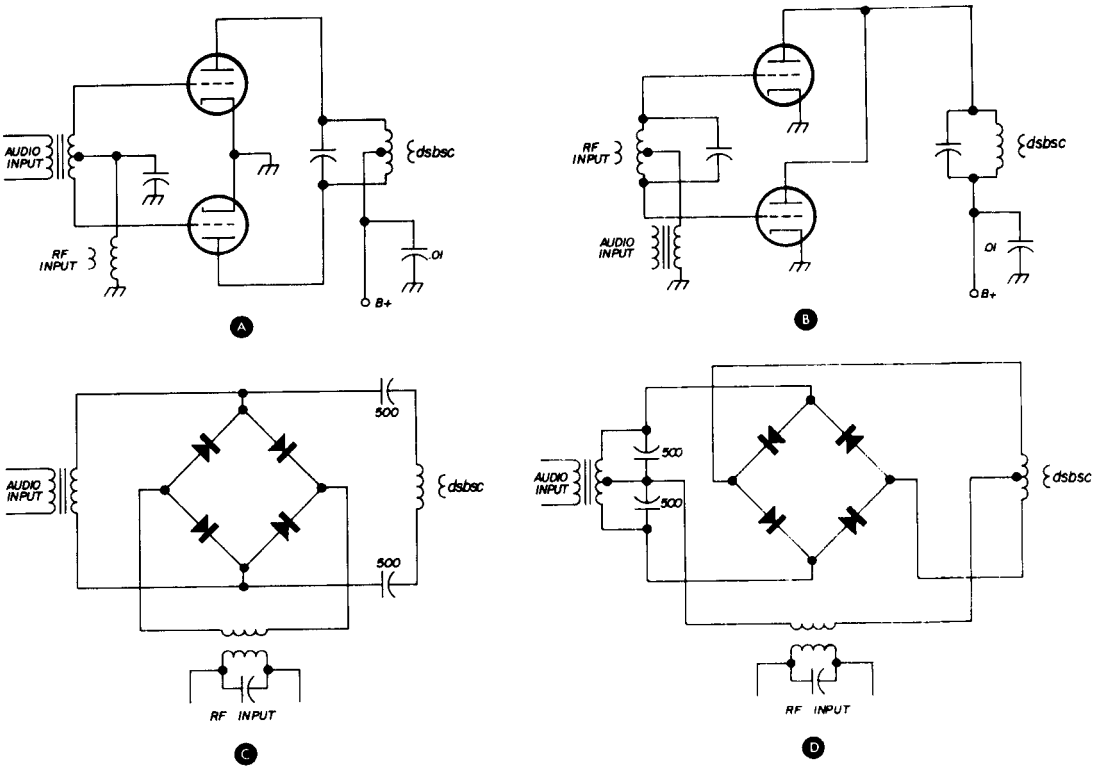

fig. 3. Different balanced modulators you may find in ssb equipment.

with the vfo frequency. One sideband falls in the 6.0–6.5 MHz range; the other falls somewhere around 3 MHz. The 6.5-MHz tuned circuits, in the amplifier that follows, reject the 3-MHz sideband easily.

The desired sideband, between 6 and 6.5 MHz, is amplified and sent to a second frequency converter, a fixed-frequency oscillator. This is where the main band-changing is done. The oscillator has a selection of crystals. With the vfo tuning the signal over a frequency range of 6 to 6.5 MHz, this final frequency conversion determines what band this 0.5-MHz spread is applied in.

For example, a 10-MHz crystal beats with the 6.0–6.5 MHz signals to produce output frequencies between 3.5 and 4.0 MHz, the 80-meter band. A 13.5-MHz crystal gives a 7–7.5 MHz spread—the 40-meter band. And so on. The 10-meter band from 28 to 29 MHz is covered with two crystals, at 34.5 and 35.0 MHz.

inside balanced modulators

These explanations are to acquaint you with exactly what you're doing when you adjust one section or another of an ssb set. One of the least understood stages is the balanced demodulator. I'd better tell you what the adjustments in it are for.*

Briefly, here is the principle of a balanced modulator—sometimes called a balanced mixer. If you feed a signal in parallel to any two perfectly matched stages and take the output from them in push-pull, the input signal is canceled. Or, if you feed the balanced stage in push-pull and take the output in parallel, cancellation occurs.

Suppose the stages are two balanced but nonlinear mixers. You feed them an rf signal in push-pull and voice signals in

*Editor's note: If you don't know balanced modulators at all, you might go back and review them in the article "Generating SSB Signals" on page 24 of the May, 1968 *ham radio*.

parallel. If you take the output of the mixer in parallel, you get only sums and differences; the original rf signal is eliminated.

Examine the stages in **fig. 3.** All four are basic examples of balanced modulators. In **fig. 3A** the rf input is fed to the triode tubes in parallel. The audio is applied in push-pull, and the output is taken in push-pull. The balanced modulator in **fig. 3B** has the audio applied in parallel and the rf in push-pull. The output is taken in parallel. In both configurations, the rf signal is canceled from the output, but modulation (the sidebands) remains.

Diodes are much more popular than tubes in modern commercial ssb transmitters. Semiconductor diodes are smaller, cheaper, and generally more dependable. They don't unbalance as easily as tubes do. **Figs. 3C** and **3D** show the two chief arrangements.

The first, **fig. 3C,** is a bridge. The anodes of two diodes are tied together, as are the cathodes of the other two. The push-pull/parallel rule holds here, too. The audio is fed to the bridge at points that unbalance the diodes ability to conduct. The unbalancing is in step with the audio frequencies. The rf, on the other hand, is fed to the bridge at balance points—the diode branches are alike between them. Rf is eliminated from the output except to whatever degree and at whatever rate the audio input is unbalancing the bridge. The result is a double-sideband output as you'd expect from any diode mixer, but with the rf carrier suppressed.

The **fig. 3D** circuit is called a **ring** modulator. It gets that name from the way the diodes are wired—in series with each other.

In a ring modulator, the output can be taken in either mode, just as long as the rf and audio are applied in opposite modes. In this one, the audio is in the same mode as the output—push-pull. The rf is applied in parallel, being fed in at the center taps of the audio and output transformers. The output is a dsbsc signal.

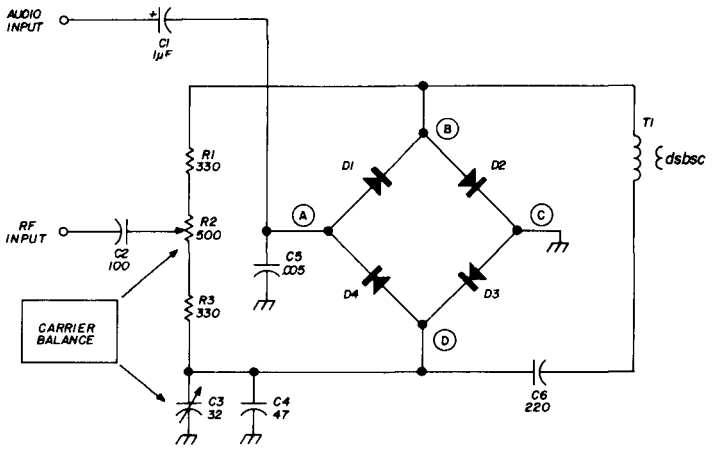

fig. 4. Most popular diode balanced modulator is form of ring type. This one is designed so it can be driven by audio and rf signals from single-ended amplifier stages.

adjusting a balanced modulator

The balanced modulator adjustments are probably the most critical ones in your transmitter. Slight misadjustment deteriorates your on-the-air sound and cuts your PEP output. Yet the principle of what must be done is simple.

The most popular ring modulator today is shown in **fig. 4.** Several commercial sets use it. It's a diode ring modulator, but its arrangement is ingenious.

Points A and C of the diode ring are the feed points for the audio signal. With point C grounded, a single-ended audio signal can be applied to point A.

The carrier signal comes from a single-ended stage, too, but the way it's handled applies it to the diode ring 90° out of phase with audio. (That's in effect what the push-pull/parallel feed does, too.) The rf is applied this way by keeping the output transformer primary and input divider R1-R2-R3 above ground for audio but at ground for rf. Capacitor C4, with trimmer C3, does the grounding. Points A and C in the diode ring are both at rf ground (notice C5).

The output is taken through T1. C6 blocks audio from reaching T1. The double-sideband output signal is coupled to an ssb filter. The carrier that formed the sidebands is canceled.

The adjustments for balance are labeled in **fig. 4.** The diodes must first of all be pretty well matched; if you replace one, either carefully match the new one to the other three or pick four matched new ones. (You can match them yourself with an ohmmeter. Just be sure that all forward readings are about the same, and that all backward readings are beyond 100k. The forward reading is the most important one for matching.)

Align R2 and C3 with no modulation. Trim them for minimum rf output. The driver is a handy monitor point, usually. Adjust the potentiometer first, then the capacitor. They interact some, so go back and forth a few times.

complete ssb alignment

Now you have the fundamentals you need for a proper job of aligning your ssb equipment. If you don't understand what you're doing, you might wind up high and dry if you run into trouble. The job isn't difficult, but it can confuse the uninitiated.

Next month, I'll show you the entire alignment procedures for a couple of ssb transmitters. They are typical ones, chosen because they demonstrate several different kinds of adjustments. I'll also take you through the adjustment of a high-power linear amp, just in case you have one in your shack or one turns up on your repair bench.

ham radio

NEW 18TH EDITION *of the famous* E&E RADIO HANDBOOK

BIGGEST SELLING BOOK FOR THE AMATEUR AND ENGINEER

Completely revised and updated by William I. Orr, W6SAI. This is the comprehensive communications manual which is the industry standard for radio amateurs. electronic engineers and technicians. Explains in authoritative detail how to design, build, and operate all types of radio communications equipment.

LATEST HOW-TO-BUILD DATA

The new 18th Edition of the famous Editors & Engineers RADIO HANDBOOK presents complete design data on the latest transmitters, receivers, transceivers, amplifiers, and test equipment. Covers SSB design and equipment, RTTY circuits, and latest semiconductor circuits, as well as IC. Also includes coverage of r-f amplifiers, special circuits, and computers. All equipment described is of modern design, free of TVI problems.

COMPLETELY UPDATED—INVALUABLE

Provides a complete understanding of the theory and construction of all modern circuitry, semiconductors, antennas, power supplies; full data on workshop practice, test equipment, radio math and calculations. Includes aspects of the industrial and military electronics fields of special interest to the engineer and advanced amateur. The 18th Edition of the RADIO HANDBOOK provides the broadest coverage in the field—complete information on building and operating a comprehensive variety of high-performance equipment. All data is clearly indexed. Over 800 pages; 6½ x 9¼"; hardbound.

SAVE! Special Pre-Publication Price!
ORDER NOW FOR SPECIAL SAVINGS

No. 65168, New 18th Ed. RADIO HANDBOOK.
Special price until Dec. 31, 1969, only.....$11.95
(After Jan. 1, 1970, regular price will be $13.50)

Order from your electronic parts distributor or bookstore, or send coupon below:

Howard W. Sams & Co., Inc.
Howard W. Sams & Co., Inc., Dept. HR-10
4300 W. 62nd St., Indianapolis, Ind. 46268
☐ Send me the new 18th Edition RADIO HANDBOOK at the special pre-publication price of $11.95.
$..... enclosed. ☐ Check ☐ Money Order.

Name

Address

City State Zip

tropospheric-duct communication

Victor R. Frank, WB6KAP, 12450 Skyline Boulevard, Woodside, California 94062

This article is being written with the anticipation that I will have worked KH6EEM on 144 MHz by the time it is printed and that the subject will then be of current interest. I have been greatly interested in tropospheric duct communication ever since the summer of 1957 when John Chambers, W6NLZ, at Palos Verdes Estates, California worked Ralph Thomas, KH6UK, at Kahuku Point, Oahu on 144 MHz. My professional experience on the subject has been with the Radio Meteorology Section of the National Bureau of Standards under Bradford Bean. My Master's thesis from Utah State University, "The Effect of the North Pacific Trade Wind Inversion on Long Range VHF Radio Communications," furnished most of the data for this article. I will assume that you have, or will, read two *QST* articles on the subject [1, 2] and will go on from there.

The troposphere is the domain of the weather. It extends to a height of about 4 to 12 miles and is composed primarily of nitrogen, oxygen, argon, water vapor and carbon dioxide with traces of neon, helium, krypton, nitrous oxide and xenon in descending order of occurrence. With the exception of water vapor the tropospheric constituents are fairly well mixed by convection from the sun-warmed surface of the earth.

The mixture of gases in the troposphere near the surface of the earth is very slightly magnetic with a relative permeability, μ_r, of 1.0000004. The relative dielectric constant, ϵ_r, is much more important for the propagation of radio waves, being about 1.0006. The dielectric constant is greater than unity because an electric field creates a dipole moment in the component molecules by shifting their charge centers slightly from their equilibrium positions. The refractive index, n, the square root of the product of the permeability and the dielectric constant, is about 1.0003 near the surface of the earth.

Since the refractive index is so close to unity it is more convenient to use the refractivity, N, which is the difference between the refractive index and unity multiplied by one million. Refractivity due to the gases other than water vapor is proportional to the molecular density. Water forms a polar molecule, however, which is one with a permanent dipole moment. Ordinarily the water molecules have random orientations and no net field. Under the influence of a radio frequency field the water vapor molecules become partially aligned, vibrating with the rf field, and the net result is an increase in refractivity proportional to the density of water vapor molecules divided by the absolute temperature. The refractivity may be determined from the following formula:

$$N = (n - 1) \times 10^6 = \frac{77.6P}{T} + \frac{3.73 \times 10^5 e}{T^2}$$

where P is the total atmospheric pressure in millibars, e is the partial vapor pressure in millibars, and T is the absolute temperature in degrees Kelvin. The vapor pressure may be determined from the dew point by reference to standard meteorological tables or from the mixing ratio, w, by the following formula,

$$e = \frac{P}{\frac{623}{w} + 1}$$

The form of the refractivity equation is theoretical; the first term is due to the induced dipole moments of all the component molecules, and the second term is due to the permanent dipole moments of the water vapor molecules. The constants are based on

experimental data.[4] The refractivity formula is accurate to 30 GHz or higher; **the atmosphere is not dispersive for radio waves.** At higher frequencies (in the infrared) the water vapor molecules can no longer keep in step with the fields, and no longer contribute to the refractivity. The refractivity for visible light is just the first or dry term.

Atmospheric pressure decreases exponentially with height. Since the dry term of the refractivity equation is dominant, the refractivity of a well-mixed atmosphere decreases almost exponentially with height. However, under certain conditions, the refractivity may deviate greatly from the smooth exponential decrease in the lower 12,000 feet of the atmosphere.

The nominal rate of decrease of temperature with height in a well-mixed atmosphere is about 2.2° C per thousand feet (3.9° F). A greater rate of decrease would promote rapid convection; a slower rate of decrease would inhibit convection. An **increase** of temperature with height is called a temperature inversion. One effect of temperature inversions is to trap water vapor and/or atmospheric pollutants. The radio refractivity may decrease rapidly within the space of a thousand feet or less through a temperature inversion that has trapped water vapor, and such a discontinuity may reflect or refract vhf and uhf radio waves.

The change of refractivity in a given distance is called the refractivity gradient. The path followed by a radio ray in the atmosphere is dependent upon its elevation angle and the refractivity gradient along the path. Usually only the vertical component is considered, and the atmosphere is assumed to be horizontally homogeneous. For rays with elevation angles below 5° or so, the curvature of the ray is equal to the negative refractivity gradient.

Thus, when the negative refractivity gradient is equal to 48 per 1000 feet or 157 per kilometer, the curvature of the ray equals that of the earth, and a ray launched parallel to the earth will follow the earth's curvature. Negative gradients of greater value are called ducting gradients. A duct is formed between the maximum and minimum heights at which a ray may be parallel to the earth—unless the minimum height is zero; in this case the ray need be horizontal only at the maximum height. These heights can be found by raytracing using Bouger's rule:

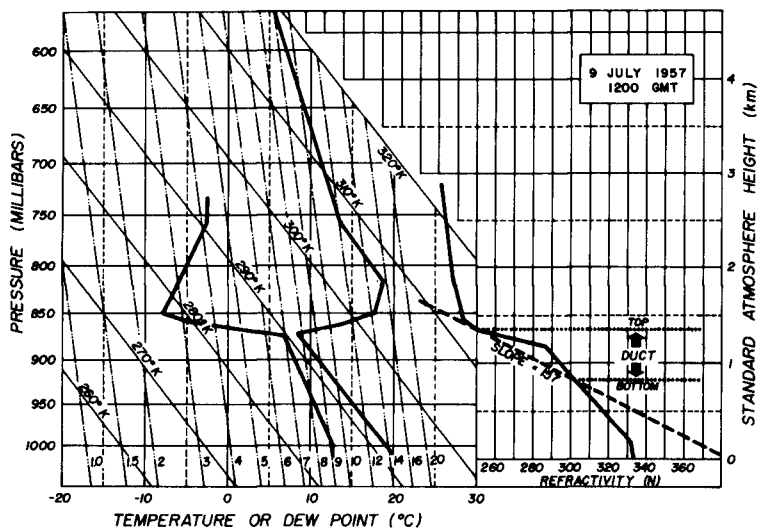

fig. 1. Upper-air sounding and derived refractivity plot for weather ship N, 1200 gmt, July 9, 1957, shows pronounced tropospheric duct. The plot on the left, water vapor, may be read as dew point or as mixing ratio in parts per thousand. The center plot is of temperature, while the plot on the right is refractivity, N. The slope of the dotted line should be — 157 per km.

$$n\ r \cos \theta = K$$

Where r is the distance from the center of the earth, θ is the elevation angle, and K is a constant for any given ray called the characteristic. (Note the difference from the formula given in the August, 1969, propagation column[3]. In that case it was elevation angle vs angle of incidence.)

There is a more simple technique for determining duct height—by graphical construction on a plot of h vs N. A line with a slope of −157 per km is constructed tangent to the h-vs-N plot at the maximum height of the ducting gradient. The line either intersects the h-vs-N plot or the ground at the bottom of the cut. In the first case it is called an elevated duct, and in the latter, a ground-based duct.

Normally a duct is formed with both a temperature inversion and a sharp lapse of water vapor content. However, if the water-vapor content remains constant, the necessary temperature gradient is 92° per km or 28° per thousand feet. On the other hand, if the temperature is held constant, the necessary drop in water-vapor content (mixing ratio) is 16.4 grams of water per kilogram of dry air per km, or 5 gm kg/thousand feet. The latter situation is the more likely.

The variation of dew point temperature and refractivity with atmospheric pressure is shown in **fig. 1.** The first two parameters were obtained from a weather bureau pseudoadiabatic* chart which was derived from a radiosonde weather balloon sounding over a weather ship midway between San Francisco and Honolulu during the first California-to-Hawaii troposheric contact on 144 MHz.

This pseudoadiabatic chart has 4 scales. The horizontal lines are the total atmospheric pressure in millibars. The vertical lines are temperature and dew point in degrees centigrade. The almost vertical lines are mixing ratio in grams of water vapor per kilogram of dry air. The lines at almost 45° are the the dry adiabats, lines of constant potential temperature are in degrees Kelvin.

* Pseudoadiabatic refers to variations in volume or pressure accompanied by loss of heat which is due to the immediate dropping out of all condensed material as soon as it is formed; used in reference to the cooling of rising air in which precipitation occurs.

At the time the chart of **fig. 1** was plotted, the surface temperature was 21° Centigrade; this corresponds to a potential temperature of about 292° Kelvin (at 1000 millibars). Free circulation to a pressure level of 876 millibars, the base of the temperature inversion, is indicated.

Note that the height scale on the right depends on surface pressure and the variation of temperature with height. The height scale plotted is for a surface pressure of 1013 mb and a **standard** atmosphere. Since the surface pressure was 1026 mb the true heights are higher than indicated.

Note that the temperature inversion extends from 1200 to 1800 meters. However, only the initial decrease in water vapor content between 1200 and 1340 meters is rapid enough to produce a ducting refractivity gradient (−252/km in this case). The extension of a line of slope −157 km from 1340 meters intersects the h-vs-N plot at 850 meters. Thus, the duct is about 490 meters thick and extends 350 meters below the temperature inversion.

Assuming that a signal has somehow gotten trapped in the duct (perhaps the source was a low-flying aircraft inside the duct), it may travel hundreds of miles with little attenuation. Note, however, that most of the energy radiated by our hypothetical source will escape. At most, rays with elevation angles between $+\frac{1}{2}°$ and $-\frac{1}{2}°$ will be trapped.

In future articles, I will describe the frequency dependence of tropospheric duct communication, climatology of the trade-wind belts, and weather observations during some long-distance vhf communications between California and Hawaii.

references

1. W. G. Hoisington, "Painless Prediction of Two-Meter Band Openings," *QST*, October, 1949, p. 22.
2. J. S. Collier, "Upper-Air Conditions for Two-Meter DX," *QST*, September, 1955, p. 16.
3. V. R. Frank, "Ionospheric Propagation," *ham radio*, August, 1969, p. 61.
4. E. K. Smith, Jr. and S. Weintraub, "The Constants in the Equation for Atmospheric Refractive Index at Radio Frequencies," *NBS Journal of Research*, January, 1953, p. 39.

ham radio

For The Experimenter!

International EX Crystal & EX Kits

OSCILLATOR / RF MIXER / RF AMPLIFIER / POWER AMPLIFIER

Type EX Crystal

Available from 3,000 KHz to 60,000 KHz. Supplied only in HC 6/U holder. Calibration is ±.02% when operated in International OX circuit or its equivalent. (Specify frequency)

$3.95

OX OSCILLATOR

Crystal controlled transistor type.
Lo Kit 3,000 to 19,999 KHz
Hi Kit 20,000 to 60,000 KHz
(Specify when ordering)

$2.95

MXX-1 Transistor RF Mixer **$3.50**
A single tuned circuit intended for signal conversion in the 3 to 170 MHz range. Harmonics of the OX oscillator are used for injection in the 60 to 170 MHz range.
Lo Kit 3 to 20 MHz
Hi Kit 20 to 170 MHz
(Specify when ordering)

SAX-1 Transistor RF Amplifier **$3.50**
A small signal amplifier to drive MXX-1 mixer. Single tuned input and link output.
Lo Kit 3 to 20 MHz
Hi Kit 20 to 170 MHz
(Specify when ordering)

PAX-1 Transistor RF Power Amplifier **$3.75**
A single tuned output amplifier designed to follow the OX oscillator. Outputs up to 200 mw can be obtained depending on the frequency and voltage. Amplifier can be amplitude modulated for low power communication. Frequency range 3,000 to 30,000 KHz.

BAX-1 Broadband Amplifier **$3.75**
General purpose unit which may be used as a tuned or untuned amplifier in RF and audio applications 20 Hz to 150 MHz. Provides 6 to 30 db gain. Ideal for SWL, Experimenter or Amateur.

Write for complete catalog.

INTERNATIONAL
CRYSTAL MFG. CO., INC.
10 NO. LEE • OKLA. CITY, OKLA. 73102

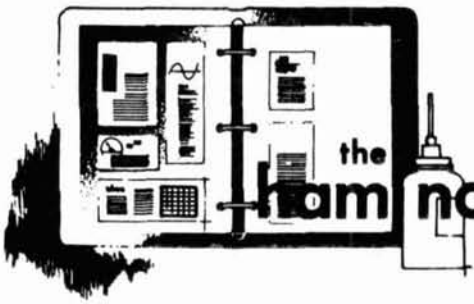

super two-meter preamp

The new Siliconix 2N5397 fet makes noise figures of 1.5 to 2 dB commonplace at 144 MHz. Although the 2N5397 is priced at $8.50 in small quantities, its performance and ease of operation make it well worth it. The 2N5397 was designed for vhf use, and it works well beyond 500 MHz, but that's another story. I was mainly interested in 144 MHz operation because a 1.5 dB noise figure is needed for moonbounce.

At the suggestion of the designer of the device, I tried it in a grounded gate configuration (**fig. 1**). Much to my delight, the circuit performed better than anything I have ever had the opportunity to use, or measure. One glance at the schematic will show you that it is as "super simple" as you can get.

Since I already have a high-performance two-meter converter, the 2N5397 preamplifier was designed to mount as close to the antenna relay as possible. This is the reason for the type-N input connector.

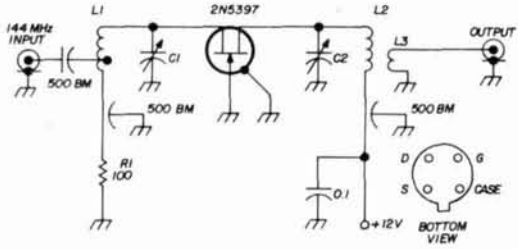

C1, C2 1.7-14.1 pF air variable (E. F. Johnson 189-505-5)
L1 5 turns no. 16, 3/8" diameter, 3/4" long, tapped at 1-1/2 turns from cold end
L2 4-3/4 turns no. 16, 3/8" diameter, 1/2" long
L3 2 turns no. 20 insulated around cold end of L2

fig. 1. High performance grounded-gate fet preamplifier for two meters. The 2N5397 is mounted in an IERC mounting clip type TXBE-019-021B or TXB2P-019-028B. Case and gate leads of the fet are soldered together.

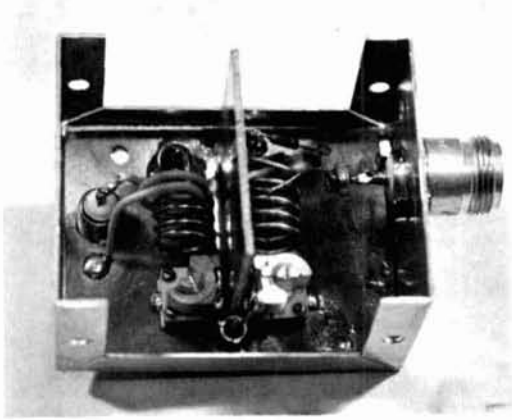

I built my preamp on a 2x2 5/8-inch piece of copperclad printed-circuit board with a 1 3/4 x 1 1/2-inch shield, and then fitted into a 2 3/4 x 2 1/2 x 1 5/8-inch minibox. I prefer this type of construction because it provides good grounds.

It's my opinion that the fet mounting is important to obtain optimum performance. IERC makes a TO-18 heat sink that can be soldered directly to the chassis; this is an ideal way to ground the fet case. The gate lead is soldered to the case lead to provide a good ground for the gate.

Tuneup is very simple. First apply +12

volts, and adjust R1 for 5 mA drain current. Next, feed in a 144-MHz signal and tune C1 and C2 for maximum output. Carefully adjust the position of L3 for maximum output, and readjust C2.

The gain of this fet preamplifier should be greater than 10 dB, and more likely, 15 dB. If you have a way of measuring noise figure, adjust the tap on L1 for best noise figure. If you don't have any noise-figure equipment, the tap shown in **fig. 1** will give good performance.

Ken Holladay, K6HCP

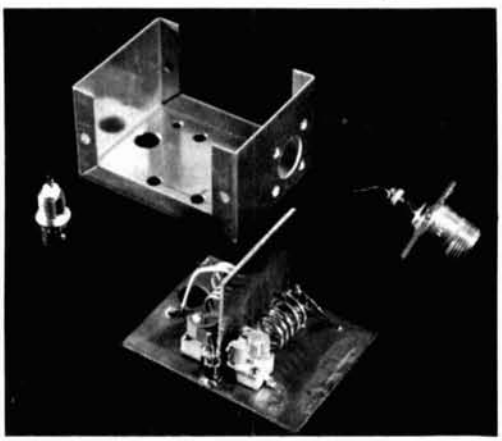

K6HCP's super two-meter preamp is built on a small piece of copper-clad board, and then mounted in a minibox.

improved sidetone operation for the SB301/401

After using my new Heath SB-301/401 combination for several weeks, I found one thing that was evidently overlooked—the sidetone monitoring system works through the speaker only, even with the earphones plugged into the phone jack. To make the sidetone monitoring compatible with earphone operation only involves the installation of a jumper from the 500-ohm **anti vox** jack to the **spare** jack diagonally across from it on the rear apron of the SB-301 receiver. The bus-wire jumper should be installed inside the chassis.

To complete the modification, it is also necessary to change the interconnecting audio cables that are used between the receiver and transmitter. The cable from the speaker is now connected to the **speaker 8 ohm** jack on the SB-301. The **speaker** jack on the SB-401 is connected to the newly wired **spare** jack on the SB-301. The **rcvr audio** jack on the SB-401 is no longer used. Other interconnecting cables are the same as before. With this simple modification, it is possible to use the sidetone monitoring system through either the earphones or the speaker. This modification should also work with the earlier SB-300/400 combination.

Don Bennecchi, W1WLZ

simplified balun

An antenna with open ends is a balanced system. Feeding it directly with coax (unbalanced feeder) causes rf radiation on the outside of the coax. The usual detuning sleeve (bazooka), a 1-to-1 transformer, requires a rather elaborate metal sleeve an electrical quarter-wavelength long. This balun has no effect on the impedance of the line or antenna. It only keeps radiation from coming back down the outer shield of the coax.

This sleeve can be considerably simplified by using kitchen aluminum foil wrapped with plastic electrical tape along its entire length **(fig. 1).** The sleeve is shorted to the coax shield at the end away from the antenna; the antenna end remains open.

Richard Mollentine, WAØKKC

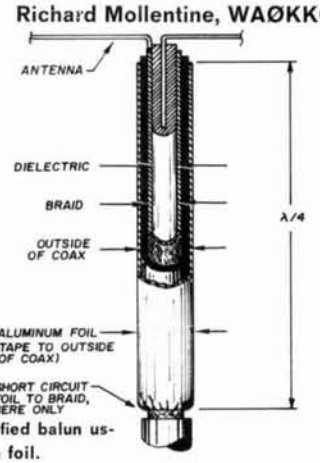

fig. 2. Simplified balun using aluminum foil.

low-loss coax

When I apparently wasn't getting out of my own backyard with a new antenna installation on two meters I was a little suspicious of that "new manufacture" RG-11/U I was using. I used a 200-watt bulb to check out the coax—when connected directly to the transmitter output connector, it was lit to full brilliance; when the coax was put between the bulb and the transmitter, the bulb barely glowed.

The solution was a section of homemade low-loss coaxial line. A 20-foot length of 1/2-inch rigid copper pipe was used for the out conductor; a length of aluminum clothesline wire (about no. 9) serves as the center conductor; teflon washers spaced every 8 inches keep the center conductor centered in the pipe.

Impedance is about 72 ohms and there is almost no loss. The assembly is strong enough to support small antennas (like a coaxial dipole) and is unaffected by rain; lateral support is provided by three nylon guys.

Gus Gercke, K6BIJ

a method for remote keying your transmitter

If you're tired of those endless trips up and down the tower to turn the transmitter on and off for swr checks, you'll be interested in this gadget. All you need is a two-conductor phone plug, a spare length of coax long enough to reach from antenna to transmitter (or any other two-conductor cable that's long enough), an spst toggle switch and some electrical tape. Connect the phone plug to one end of the coax, the spst switch to the other end and tape the switch terminals. Put the phone plug into the cw key jack on your transmitter and operate the switch to be sure everything is working properly.

Now load your transmitter into a good dummy load; exchange the dummy load for the transmission line to your antenna, and take the remote-keying line and swr bridge up to the antenna location. This is the procedure I use for keying my transmitter from the roof when tuning up the gamma match on my 6-meter Yagi.

Fred Hock, WA3HDU

wind-protected crank-up tower

After building the anemometer described by W6GXN in the June, 1968 issue of **ham radio,** I decided to carry the project one step further. I replaced the conventional 1-mA meter movement with an instrument that has a set of contacts that may be used for external control. The contacts are adjusted so they close at some pre-determined wind velocity—this picks up a latching relay that controls the tower motor. With this setup the tower is lowered automatically when the wind exceeds a certain level.

Simpson and API both build adjustable meter relays that can be used for this application. Although these instruments are fairly expensive, you can often find surplus units with the necessary contacts to control the remote relay. When the meter needle reaches a pre-determined setting, the magnetic contacts in the meter lock the contacts together, closing the latching contacts and operating the remote relay to control the tower motor. You could even use the extra set of contacts to indicate if the tower is up or down.

E. C. Sherrill, K6JFP

YOUR HEADQUARTERS FOR THE FINEST NEW EQUIPMENT HAS EXCELLENT USED GEAR ALSO

STELLAR USED GEAR SAMPLER

DRAKE		**COLLINS**	
T4XB	$349.00	32S1	$385.00
T4X	295.00	75S3	425.00
AC4	70.00	75A4	395.00
R4B	349.00	75A4 3 filters	450.00
MS4	10.00	**NATIONAL**	
R4A	295.00	NC200	259.00
L4	525.00	NCX5 II	359.00
HALLICRAFTERS		NCX5 I	319.00
SR400 W/AC	750.00	NCX5 AC	75.00
HT32A	195.00	NC303	199.00
SX115	325.00	NC300	169.00
TMC		**SQUIRE SANDERS**	
GPR 90 W/spkr	219.00	SS1R/SS1S	425.00
HAMMARLUND		**CLEGG INTERCEPTOR**	
SP600	349.00	W/All Bander	
HQ170	169.00	Rackmount	249.00

SUBJECT TO PRIOR SALE.
NO TRADE — SHIPPING PRE-PAID PRICES.
WRITE FOR OUR TRADE PRICES.

See GLEN FADDEN, W2CXX
or a member of his staff at

stellar industries
DIV. OF STELLAR I, Inc.
SALES AND SERVICE

10 GRAHAM ROAD WEST, ITHACA, N. Y. 14850 · TELEPHONE 607 - 273-9333
Your Central New York headquarters for new and used ham gear
HOURS: 9:00 A.M. to 5:30 P.M. Monday through Friday 9:00 A.M. to 5:00 P. M. Saturday

new products

miniature monoband beams

The new monoband Mini-beams from Mosley Electronics, Inc. are designed to conserve both space and money. These mininature three-element beams for 10 and 15 meters use elements that are 6 to 8 feet shorter than their full-sized counterparts; furthermore, they weigh about one-third less. The MB-10 Mini-Beam for 10 meters weighs about 6½ pounds; the MB-15 for 21 MHz weighs 9 pounds. Because their lighter wind loading puts less strain on tower and rotor, a less expensive rotor can be used. The new Mini-Beams feature a gamma matching system, time-tested Mosley boom-to-mast clamping arrangement, high grade aluminum tubing, high impact polystyrene clamping blocks and stainless steel hardware. Rated for 500 watts cw or 1 kW PEP ssb. For more information, write to Mosley Electronics, Inc., 4610 North Lindbergh Boulevard, Bridgeton, Missouri 63042.

six-meter linear

The Raytrack Company has just introduced the Horizon VI L, a 2000-watt PEP linear amplifier for operation on the amateur 50-MHz band. The amplifier uses two zero-bias grounded-grid 3-500Z triodes, operated in class B for maximum efficiency. The linear uses a separate heavy-duty solid-state power supply, an adjustable alc network that is compatible with most standard equipment, a relative output indicator, and exciter feedthrough provided by the flip of a switch—no need for additional switching when you want to operate with just the exciter. When you want to put the linear on, the fast-heating 3-500A's are ready to go in a minimum amount of time. The Horizon VI L is easily driven to full output by 100-watt PEP six-meter transmitters. Unit can also be used on cw, a-m and RTTY. $595 including power supply from your local dealer, or write to Raytrack Company, 3498 East Fulton Street, Columbus, Ohio 43227.

experimenters bulletin

If you're a typical basement electronics experimenter, you'd probably enjoy reading **The Australian EEB,** an informal electronic experimenters bulletin published about eight times a year. Edited by VK7RG and VK7ZAR, it is an experimenter's magazine, but not necessarily a construction manual—it contains many constructional projects, but also many common sense observations on technique. It is a magazine which ranges over a wide field of interests in electronics, and

provides a voice for experimenters who have ideas, and who want to tell others about them informally, by letter or by article. The style is very casual, and the format haphazard but easy to read and enjoy. Topics covered in the past include diode and transistor testing, meter protection, printed circuit techniques, transistorized voltmeters, Q-multipliers, oscillators and a complete series on transistorized transmitters. Current issues are loaded with common sense ideas for receiver and mixer stages. Subscriptions are $1.80 per year and well worth it. Write to The Australian EEB, P. O. Box 177, Sandy Bay, Tasmania 7005, Australia. Sample copies are available.

rf power transistors

Motorola Semiconductor is currently developing a series of transistors and integrated circuits for the microwave region. The first devices to be made available are characterized as oscillators and amplifiers. Oscillator transistors in the series are the MM8008, 8010 and 8011. The MM8008 develops a minimum of 300 mW at 2 GHz and more than ½ watt at 1.5 GHz. The MM8010 and 8011 have somewhat lower power outputs.

These transistors are housed in the wide-flange T0-107 case shown in the photo. This package provides both convenient mounting and efficient heat transfer in resonant cavities and is less costly than conventional coaxial packages. A specific feature of these oscillator transistors is their low noise generation; in oscillator service, a signal-to-noise ratio of better than 80 dB can be obtained.

The second series of rf transistors is designed for class-C service in the 1-GHz range. The MM4430 is capable of 2.5 watts output at 1 GHz with 6 dB gain; its 1-W counterpart is the MM4429. These transistors are packaged in a ceramic package with low inductance stripline leads. The stripline opposed emitter (SOE) package has emitter leads on opposite sides of the package. This provides isolation between the base and collector leads and permits low inductance grounding.

Two other transistors which may be used as either oscillators or amplifiers in the 1 GHz region are the 2N5108 with 1 watt output and 5 dB gain at 1 GHz, and the MM8009 with slightly less output.

Informed sources at Motorola indicate that rf transistors due to be introduced by late this year include power transistors with 5-watt capability up to 2 GHz and 10 watts at 1 GHz. For more information on these new microwave power transistors, write to Technical Information Center, Motorola Semiconductor Products, Inc., Box 20924, Phoenix, Arizona 85036.

complementary audio transistors

Motorola has just announced two pairs of low-cost plastic encapsulated silicon transistors for use in 20- and 35-watt complementary audio amplifiers. The four transistors use Motorola's Thermopad package for easy mounting and efficient heat transfer. The 5-amp npn MJE205 and pnp MJE105 will dissipate up to 65 watts, and exhibit current gain of 25 to 100 at a collector current of 2 A. An application note describing their use, "A 20-Watt Amplifier with Complementary Symmetry Thermopad Silicon Power Transistors," AN433, is available at no charge.

The npn MJE2801 and pnp MJE2901 are 10-amp transistors with 90-watt power dissipation and high current gain of 25 to 100 at a collector current of 3 amps. An application note describing their use in 35-watt amplifiers is available (AN427). For more information, write to the Technical Information Center, Motorola Semiconductor Products Inc., Box 20924, Phoenix, Arizona 85036.

comments

Dear HR:

Concerning the July **ham radio** editorial on antennas, my only worry is for sincere experimenters who want to try Bonadio antennas. They may be discouraged by knowledgeable engineers who "know" that these antennas are only, "normal antennas—nothing special about them. Any expert engineer can see that; he does not have to try them."

Actually, the last great frontier in ionosphere propagation is in the approximate 88 dB between excellent skip and the unreadable level. Engineers have insisted to me, "A wave is a wave, is a wave, and they all propagate alike." However, we know that polarized light reflects at different rates from different surfaces, and in different angles, and in different densities in propagation, and when detected after reflection and refraction the light-wave losses can vary by 50 dB from maximum to minimum.

My experiments suggest to me that waves from my antennas, in overseas contacts, propagate with less losses only when the path losses are significant. I interpolate differences of +10 dB commonly, +20 dB frequently, +30 dB occasionally and once in awhile, apparently +40 dB. However, when ionospheric skip is wide open, my antenna is only equal to a Hertz antenna which is, then, very satisfactory.

The last two DX cards I received were from PY1DMS, in Rio, on 40 meters, who gave me S9+5 while I never could read him to hear my report, (about 45 dB between us) and from PY1DEH, in Guanabara, on 15 meters. He gave me S9+10 but never was better than readability 2, and I had to wait for the card to find a report (about 50 dB between us).

This is a problem. While they hear me well, I have all I can do to hear them over the cosmic noises. Its a little like being on the same side of one-way skip most of the time.

Meanwhile, every one of 157 antenna manufacturers have turned me down, yet none experimented with the ionosphere in the circuits under test. This is like my 15 months in Africa where I avoided the locations of elephants, being proof to me that there are no elephants in Africa. The excellent performance characteristics of my antennas are particularly apparent when the ionosphere is the most lossy, so tests without including the ionosphere can not be valid.

I am pleased to think that amateurs can enjoy these antennas alone for years before the commercial interests admit that amateurs developed and proved out something that the commercials had overlooked. We need these occasions to justify our occupying the spectrum.

George A. H. Bonadio, W2WLR

"If you'd use a 20,000-ohm resistor instead of 10,000 ohms, the 1 mA change in plate current will develop 20 volts, giving you a nice increase in amplification."

NOW AT YOUR DEALERS!

FROM THE MAKERS OF THE FAMOUS GALAXY TRANSCEIVERS

The Galaxy FM-210 2 Meter FM Transceiver

● Now every Amateur can buy Galaxy's well-known quality and performance in a 2-Meter FM Transceiver! This American-made, solid-state, FET front end transceiver offers no compromise performance for direct or repeater communications...a full 5 watts of Power (or 10 watts with the optional AC-DC Power Booster!) Check these specs and you'll agree it's a lot of Transceiver for only $199.95! *See one...try one!*

SPECIFICATIONS

Frequency range: 143-149 MHz. Antenna Impedance: 50 Ohms Nominal Power Req'mts: 12-14 VDC (or optional power booster)

Transmitter: Power Input: 5 watts (10 W. with pow. booster) • Freq. Control: 3 Chan. crystal controlled • Microphone: High Impedance req'd. • Deviation: Adj. narrow or wideband with clipper filter also adj. for optimum clipping level.

Receiver: Sensitivity: SINAD .5uv for 12db, 1uv provides 20 db quieting. • Adjustable squelch • Modulation Acceptance: FM wideband (narrow band available) • Type: Dual Conversion, FET front end for minimum cross modulation and overload • IF Frequencies: 10.7MHz and 455 KHz • Freq. Control: 3 chan. crystal controlled • Audio Output: 3 watts (intr'nl 3.2 spkr.)

Power Booster: Provides high power operation from either 12-14VDC or 117 VAC. Makes an ideal fixed station accessory. ($39.95).

galaxy electronics

"Pacesetter in Amateur/Commercial Equipment Design"

10 South 34th Street • Dept. FF • Council Bluffs, Iowa 51501

GEM-QUAD FIBRE – GLASS

ANTENNA FOR 10, 15, and 20 METERS.

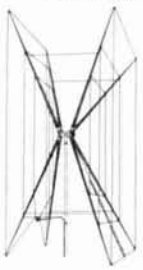

Two Elements $77.73
Extra Elements $45.00 ea.
Shipped Freight Collect
INCLUDES U.S. Customs Duty

KIT COMPLETE WITH
- **SPIDER**
- **ARMS**
- **WIRE**
- **BALUN KIT**
- **BOOM WHERE NEEDED**

SEE OUR FULL PAGE IN JUNE ISSUE

Buy two elements now – a third and fourth may be added later with little effort.

Enjoy optimum forward gain on DX, with a maximum back to front ratio and excellent side discrimination.

Get a maximum structural strength with low weight, using our "Tridetic" arms.

MANITOBA DESIGN INSTITUTE AWARD WINNER

Structural Glass LIMITED

20 Burnett Avenue, Winnepeg 16, Manitoba, Canada

WHY

YOU SHOULD HAVE

W3KT

FORWARD YOUR QSLs TO DX STATIONS

W3KT has over eight years of experience in operating an outgoing QSL service.
W3KT has forwarded well over a million QSLs during that time.
W3KT forwarded over 250,000 QSLs in 1968 alone.
W3KT personally has 345 countries confirmed.
W3KT offers you a **DELUXE** service. All you have to do is to fill in the card.
W3KT considers your QSL a personal message, and sends it out **PROMPTLY** by FIRST CLASS mail.
W3KT keeps up-to-date files of stateside QSL managers. When he sends cards to them he includes an SASE, and sends the replies to you via your QSL Bureau.
W3KT sends other cards to the proper QSL Bureaus, or, where necessary, direct.
W3KT sends out 30 CARDS **PER DOLLAR,** and it is not necessary to send these all at the same time, or if you prefer, he will forward your QSLs at FOUR CENTS EACH.
W3KT charges **NO MEMBERSHIP FEE.**

TRY THIS SERVICE!

CAN THOUSANDS OF USERS BE WRONG?

W3KT QSL SERVICE

RD 1, Valley Hill Road **Malvern, Pa. 19355**

a complete amateur radio station in one portable package

SWAN *Cygnet*

A 5 BAND 260 WATT SSB TRANSCEIVER WITH BUILT-IN AC AND DC SUPPLY AND LOUDSPEAKER **Only $435**

WANTED — YOUR GOOD USED HAM GEAR — We pay top prices for your ham gear — write us for quotations — trade your used gear in on new ham gear and get the BEST trades — new gear for delivery, Swan, Drake, Galaxy — mobile antennas, beams, verticals — tubes and small parts for the builder.

Used gear for sale or trade — all gear listed guaranteed for 90 days — subject to prior sale — all gear listed has been operated and is in excellent operating condition.

B & W
5100 ..... $ 65.00
5100-B (Fair) ..... $ 50.00

COLLINS
32V3 (Vry gud) $195.00
312B-5 (Like new) $299.50
KWM-2, 30L-1, 516F-2, 312B-4 (Pkge. deal) — All less than two years old. Ser. #12,000's. ALL MANUALS $1275.00

HAMMARLUND
HQ-105TR ..... $ 85.00
HQ-145AC $165.00
HQ-170 ..... $180.00
HQ-180 ..... $199.95

HALLICRAFTERS
HT-37 (Like new) $235.00
SX-101 ..... $125.00
SX-111 ..... $150.00

HEATH
Warrior (4-UEW-572'B) $175.00
HW-16 with HS-24 spkr. and headphones $125.00
DX-60A ..... $ 60.00

GONSET
GSB-201 Linear $175.00

GALAXY
Gal. 111 & AC/PS (Fair) $195.00
Gal. V Mk3 & AC/PS (Near new) $420.00
Del. Spkr. Console ..... $ 65.00
Special VFO ..... $ 37.50

All gear listed F.O.B. Oklahoma City and subject to prior sale. Guaranteed 90 days.

Bob's AMATEUR ELECTRONICS **Phone CE 5-6387**

"THE COMPLETE HAM STORE"
927 N.W. 1st Oklahoma City, Oklahoma 73106

"WE TAKE TRADE-INS ON ALL LINES OF NEW EQUIPMENT"
TWO-WAY RADIOS – SALES • SERVICE • INSTALLATIONS

flea market

■ **RATES** Commercial Ads 25¢ per word; non-commercial ads 10¢ per word payable in advance. No cash discounts or agency commissions allowed.

■ **COPY** No special layout or arrangements available. Material should be typewritten or clearly printed and must include full name and address. We reserve the right to reject unsuitable copy. **Ham Radio** can not check out each advertiser and thus cannot be held responsible for claims made. Liability for correctness of material limited to corrected ad in next available issue. Deadline is 15th of second preceeding month.

■ **SEND MATERIAL TO:** Flea Market, Ham Radio, Greenville, N. H. 03048.

OCTOBER 12th *is the date of the year's big event.* The Miami County ARC Hamboree Fleamarket at Fairgrounds in Troy, Ohio. Open sales from 10:00 a.m. till ? ?. Auction from 3:00 till 5:00 p.m. Table space $1.00. HW-100, TA-33JR, Drake W-4. Plus many other prizes. Donation $1.00. Held indoors rain or shine. For more info write W8FW, Box 214, Troy, Ohio 45373.

QST's OF MAY AND JUNE 1916 wanted. Price or trade no object. W2KUW, 308 Hickory St., Arlington, N. J. 07032.

TOROIDS. 88 & 44 mhy., Center-tapped, not potted, 5/$2.00 POSTPAID. Model 32KSR latest page printer, excellent little used condition $200. FRXD 14 typing reperferator-TD combination $25. Deskfax #6500 facsimile transceiver $20. Brand new Clegg 66'er, original box $160. National NCX5 and NCXA like new $400. Drake 2B&2BQ $175. 11/16" reperferator tape $3/box/10. B&W 51SB sideband adapter $50. WANTED: Ham-M. Stamp for list. Van W2DLT, 302H Passaic Avenue, Stirling, N. J. 07980.

SWAN 250 with 117XC AC supply, VOX unit, 100 kc calibrator $325. 6M. Gonset sidewinder 910B with AC supply $250. Gonset COMM III 6 meters $130. Gonset COMM IV 6 meters $155. Gonset VHF VFO #3357 $50. Heathkit HR-10B ham band rcvr. $60. Globe King 500A (4 ft rack) 500 watt AM & CW xmtr. $1.50. Globe DSB 100 $35. Hallicrafters gen. coverage rcvr. SX71 $90. Hallicrafters military R-44/ARR-S rcvr. 28 - 146 megs with AC supply $75. All equipment is in mint condition and works excellent. You pay shipping. Tom Dittrich, WB2LZD, 249 Meadow Lane Vestal, New York 13850.

POLICE — FIRE — AIRCRAFT — MARINE Calls on your broadcast radio with TUNAVERTER S! Tunable — Crystal! Brochure. Salch Company, Woodsboro HMC, Texas 78393.

TELETYPE PICTURES for sale. 50 pictures for $1.00. Perforated and audio tapes also available. Pictures for volume two solicited. W9DGV, 2210 - 30th St., Rock Island, Illinois 61201.

SAVE. On all makes of new and used equipment. Write or call Bob Grimes, 89 Aspen Road, Swampscott, Massachusetts, 617-598-2530 for the gear u want at the prices u want to pay.

TS47 FRACTION BAR APR NEW, tested unit. Recently removed from violet foil wrapper. Sealed in like-new case. Photos of interior $10.00 Money back guarantee if "works" left unmodified as they are now. Price $150.00 postpaid. Ralph Campbell, W4KAE, 316 Marino Drive, Lexington, Kentucky 40505.

TAMPA HAMFEST — Hillsborough Amateur Radio Society, Inc., announces its Annual Tampa Hamfest to be held October 12, 1969, at Lowry Park, Sligh Ave. & North Blvd., in Tampa, Fla. Plenty of free parking — lots of prizes.

WRL'S USED GEAR has trial-terms-guarantee! KWM1 — $249.95; KWM2 — $695.00; SR150 — $299.95; HW12 — $89.95; Swan 250 — $249.95; WRL Duo-Bander 84 — $119.95; TR3 — $369.95; NCX3 — $169.95; NC200 — $249.95; SB34 — $299.95; Galaxy VMK2 — $279.95; Ranger — $99.95, many more. Free "blue book" list from: WRL, Box 919, Council Bluffs, Iowa 51501.

ROCHESTER, N. Y. is again Hamfest, VHF meet and flea market headquarters for largest event in northeast, May 16, 1970. Write WNY Hamfest, P. O. Box 1388, Rochester, N. Y. 14603.

ANNUAL TEXOMA HAMARAMA which will be held again at the beautiful Lake Texoma State Lodge, November 14-15-16, 1969. Registration is $2.00 per person. Programs, swapping and goodies. A family affair for anyone interested in radio. Plenty of camping and trailer spaces available. For Lodge or Cabin accommodations, write or call directly to the Lake Texoma Lodge, Kingston, Oklahoma 73439. Phone 405-564-2311. Mail registrations for the Hamarama to Texoma Hamarama, P. O. Box 246, Kingston, Oklahoma 73439.

GREENE DIPOLE CENTER INSULATOR . . . see ad page 96, September 1969 Ham Radio.

HALLICRAFTERS FOR SALE. HT-37 and SX-101A. Best offer over $100 each. W8INV, 11025 Helmut, Chardon, Ohio 44024.

DEALERS. Do you carry R.S.G.B. publications? They are real best sellers. Interesting and well priced. For complete information write Comtec, Box 592, Amherst, N. H. 03031.

WORLD QSL BUREAU — see ad page 86.

ORIGINAL EZ-IN DOUBLE HOLDERS display 20 cards in plastic, 3 for $1.00, 10 for $3.00 prepaid. Guaranteed. Patented. Free sample to dealers. Tepabco, John K4NMT, Box 198R, Gallatin, Tennessee 37066.

FOR SALE: KWM-2 #12566 and #15750 (both latest series), 516F-2's, $825 and $875. 312B-4, $145. 75S3 #10679, $375. 75S3-B #16895, $495. Henry 2K-2, spare 3-400-Z, $575. HT-32-A (immaculate), $275. R4-A, T4-X, AC-4, MS-4 (late production), $625. Swan 350, 117-XC, 14-117, $395. HW-32-A with HP-13 or HP-23, $125. HW-12-A with HP-13 or HP-23, $120. Tektronix 514-D, $195. 136B-2 Noise Blanker (KWM-2), $65. Comdel CSP-11, $75. 30L-1 and 312B-5 (both in factory-sealed cartons), 15% off. HO-13 "Ham Scan", $35. F455J-05, $50. F455FA-15, $45. F500B-31, $35. C. E. QT-1 VOX, $10. Messenger III (new), $125. KWM-1, 516F-1, $225. James W. Craig, W1FBG, 29 Sherburne Avenue, Portsmouth, New Hampshire 03801. 603-436-9062.

QSL'S — BROWNIE W3CJI — 3111-B Lehigh, Allentown, Pa. 18103. Samples 10¢. Cut catalogue 25¢.

WANTED: 200 HZ and 1500 HZ FILTERS for Collins S-Line receiver. W1DTY, Box 25, Rindge, N.H. 03461.

$ FOR YOU

WE NEED YOUR SURPLUS TUBES

1P21
2C39
2K25
2K48
2K (any digits)
3-400
3-1000
3B24
3B28
3CX2500
3CX3000
3CX5000
3CX10,000
3E29
3K (any digits)
4-65
4-125/4D21

4-250/5D22
4-400A/8438
4-1000A/8166
4X150A
4CX250B
4CX250R/7580W
4CX300
4CX250A/8321
4CX1000A/8168
4CX3000A/8169
4CX5000A/8170
4CX5000R/8170W
4CX10,000/8171
4X150G/8172
4PR60A or B
4PR (any digits)
5-125B/4E27A

5R4WGB
6BL6
6BM6 or 6A
6L6
7D21
8D21
9C21
9C25
75TL
304TL
VA (all types)
250TH
450TH
450TL
QK (all types)
715C
802

805
807
810
811A
812A
813
832A
833A
891
891R
TW (all types)
TWT (all types)
NL (all types)
4000 series
5000 series
6000 series
7000 series
8000 series

Please send us your surplus inventory lists. We want to buy other tubes as well as those listed above.

THEODORE E. DAMES CO.

308 HICKORY ST., ARLINGTON, N. J. 07032

Phone: 201 998-4246

MANUALS — TS-323/UR, TS-173/UR, LM-18, BC-638A, SSB-100, $5.00 each. Many others. SASE brings reply. S. Consalvo, W3IHD, 4905 Roanne Drive, Washington, D. C. 20021.

THE ELECTRONIC MAIL ADVERTISER published by WO Bargains Galore, is the fastest, most readable listing of electronic bargains. Twice a month, 6¢ a word when you subscribe. For a free sample send your QTH to Electronic Mail Advertiser, 1949 Van Reek Lane, St. Louis, Missouri 63131.

WANTED: ROAD MAPS of your state which show county names. Guy Langlois, FR7ZG, P. O. Box 592, Saint-Denis, Reunion Island, Indian Ocean.

---

73 MAGAZINE — COMPLETE COLLECTION. 1st year bound volume, rest single issues. No splitting. Complete set only. K1PSR, Box 132, Amherst, NH 03031.

RARE COUNTY ACTIVITY. The NJDXA will operate from the "very rare" Warren County in New Jersey. Call sign: W2JT/2. Continuous operation from 1600 GMT on October 18th to 2000 GMT on October 19th. Frequencies: CW 3555, 7055, 14055, 21055, & 28055 KC. SSB 3855, 7255, 14255, 21355, & 28555 KC. QSL information: SASE to W2JT or to the "W2" QSL Bureau.

FIFTH ANNUAL TAWAS HAMFEST, October 3-5, 1969, to be held in East Tawas, Michigan; 60 miles north of Bay City on US-23. Displays, Demonstrations, Swap-n-Shop and door prizes. For further information contact Jerry Mertz, W8DET or Joseph Bennett, WA8CHN.

TOROIDS 44 and 88 mhy. Unpotted. 5 for $1.50 ppd. M. Weinschenker, Box 353, Irwin, Pa. 15642.

THE ANNUAL DINNER/BANQUET of the Central New York Chapter of the Quarter Century Wireless Association will be held at the Hotel Oneida in Oneida, New York on Saturday, November 1, 1969. The Finger Lakes Chapter and the Mohawk Chapter will join us in this occasion. Tickets are $5.00 per person. All reservations should be in no later than October 26th. Write to your chapter secretary for full particulars and for tickets. Cocktail hour 5-7 p.m. Dinner at 7 p.m. Make checks payable to the Central New York Chapter of QCWA.

QSL'S, 15¢, Nicholas Print, P. O. Box 11184, Phoenix, Arizona 85017.

RTTY — TERMINAL UNIT — Epoxy PC board page 38 June HR $10 postpaid. Cashion Electronics, Box 7307, Phoenix, Arizona 85011.

NEMS-CLARKE RECEIVERS WANTED. 1400 Series crystal controlled telemetry models covering 215-245/260 MHz preferred but all models in 1300, 1400, 1500, 1600 and higher numbered series also of interest. Please send accurate description of what you have to TUCKER ELECTRONICS CO., POB 1050, Garland, Texas 75040.

QST'S WANTED: December 1915, January to December 1916. Any unreasonable price paid! Ted Dames, 308 Hickory St., Arlington, N. J. 07032.

MAGAZINES. QST since March 1944. CQ since 1947. Sold as individual copies. What issues do you need? Write K1PSR, Box 132, Amherst, NH 03031.

NORTHERN CALIFORNIA Hams: Best deals — new and reconditioned equipment. Write or stop for free estimate. The Wireless Shop, 1305 Tennessee, Vallejo, California 94590.

NEEDED — DEC. 1945 CQ. W1DHZ, Box 185, Amherst, NH 03031. 603-673-4885.

YOUR AD belongs here too. Commercial ads 25¢ per word, Non-commercial ads 10¢ per word. Commercial advertisers write for special discounts for standing ads not changed each month.

COMPARE IT?

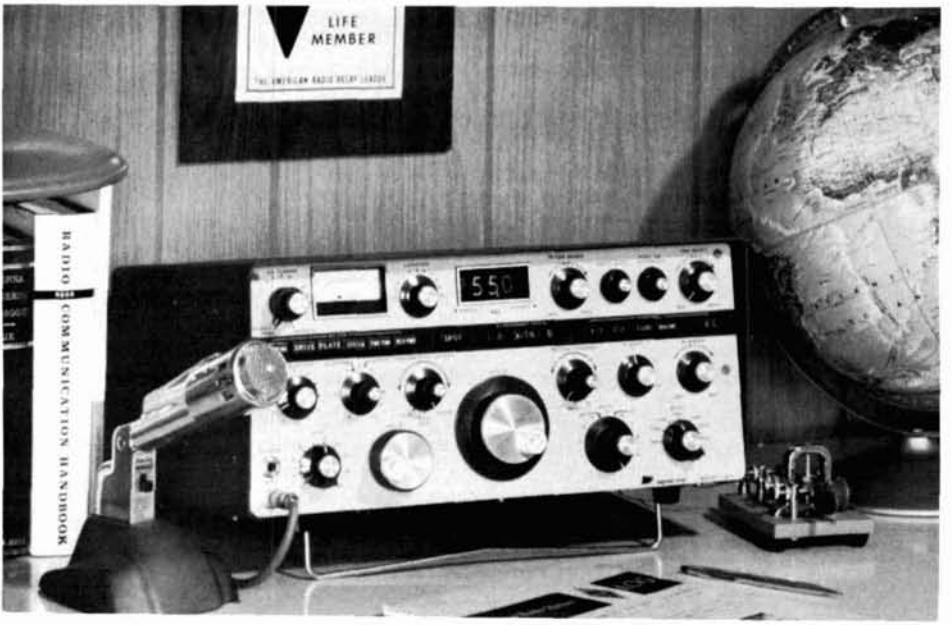

...WITH WHAT?

The CX7 practically demands comparison. Question is . . . what to use for a standard? A transceiver? Or transmitter-receiver separates?

***You'll really need one of each.* Don't forget power supplies, speech processor, keyer, directional wattmeter. Pick the best. In fact, set up your "dream station" . . . at least on paper. NOW . . .**

WHATEVER YOUR CHOICE IN THE PAST . . .

COMPARE IT POINT-BY-POINT with the NO-COMPROMISE CX7 . . .

COMPARE the CX7 with **any receiver** for sensitivity, selectivity options, dynamic range, AGC merit, VFO smoothness, interference rejection . . .

COMPARE the CX7 with **any transmitter** for continuous power output in **all** modes, P.A. ruggedness, crisp audio punch, low distortion, instant CW break-in and spotting, quick band-change . . .

COMPARE the CX7 with **any transceiver** for total size and weight . . . the extreme flexibility of its dual-channel system . . . the convenience of its completely self-contained design . . .

CONSIDER the CX7's **incomparable** frequency coverage and readout precision . . . aerospace-bred excellence in engineering and craftsmanship . . . built-in "extras" . . . overall versatility . . .

SEE WHAT YOU'VE BEEN MISSING?

"It Speaks for Itself"

signal/one

A Division of ECI (An NCR Subsidiary)

Write for detailed technical information.

2200 Anvil Street N. • St. Petersburg, Florida 33710

NOW..... A LOG BOOK TO COMPLEMENT THE MODERN AMATEUR STATION

A new concept in station log books for the *serious amateur* – designed and published by serious amateurs with the side band operator primarily in mind. Enough space to enter sixteen or more calls on each Q.S.O. – Ideal for Round-table – Net or Mars operations. Seventeen seperate group entries on each page – 150 pages – enough log book for 18 months use for the average operator. Log complies fully with latest F.C.C. regulations, a copy of which is printed on the front inside cover.

Each page is printed in two colors – slot perforated and punched for binding. A hard back permanent binder with index sheet is furnished with each log book. Pages may be removed and filed as they are used or removed and transferred to a clip board for mobile operation.

Log books will be shipped post paid upon receipt of check or money order for $3.85.
Address your orders to:

EAST TEXAS PHOTOCOPY COMPANY, INC.

P. O. BOX 59 TYLER, TEXAS 75701

GONSET

GSB 201 MK IV

10-80 METER LINEAR AMPLIFIER

...the work horse

- Four (not two) type 572B husky carbon anode tubes for a full 2000 watts PEP SSB input.
- 120 or 240 volts primary power input.
- Instant-On, No Warm-Up, No Waiting when switching from barefoot, to full power.
- Universal rear of cabinet circuitry, may be connected for transceiver, or receiver-transmitter use, without internal modification.
- Plus many more exciting features.

AMATEUR NET $495.00

Exceptionally compact—only 8½" high, 12⅝" wide, and 17" deep—the GSB-201 MKIV lends itself readily to table-top mounting.

See your favorite distributor
—Write for brochure

GONSET®

DIVISION OF AEROTRON, INC. ▪ P. O. BOX 6527 ▪ RALEIGH, N. C. 27608

A MINIATURE SOLID STATE SSB TRANSMITTER IN MODULAR FORM

Build a complete solid state transmitter for 10 through 80 meters with printed circuit modules by Walter Schilling of West Germany. All the hard work has been done: The units come completely assembled and aligned. Only interconnections and external controls are required.

HS 1000 C 9 MHz exciter for SSB, AM, FM and CW. Includes modulator and crystal filter. **$66.50**

HS 1000 Mx Mixer-oscillator for 10-80 meters. Output 1 Watt, sufficient to drive 150-200 Watt linear! **$108.00**

HS 1000 V VFO 5-5.5 MHz **$48.00**

Also available

HS 1000 S VOX/Anti-trip for above **$16.00**

HS 1000 D 9 MHz exciter for transceivers **$77.75**

si

SPECTRUM INTERNATIONAL
BOX 87 TOPSFIELD
MASSACHUSETTS 01983

NOW, FOR THAT "Extra Class". 2 POWERFUL LINEARS

Built to Operate Dependably With Plenty of Reserve

- Dependable Operation
- Rugged Eimac 3-1000Z
- Instant Transmit • ALC
- Fast Band Switching
- Easy Load and Tune
- Real Signal Impact

BTI LK-2000 . . . For maximum legal amateur input . . . SSB, CW, RTTY. Price **$795.00**

BTI LK-2000HD . . . For heavy duty applications such as MARS, high power RTTY and SSB. Price **$895.00**

Listen for the hundreds of LK-2000 linears now on the air and judge for yourself. Write for free illustrated brochure or send $1.00 for technical and instruction manual.

BTI AMATEUR DIVISION
Hafstrom Technical Products
4616 Santa Fe, San Diego, Ca. 92109

WE PAY HIGHEST PRICES FOR ELECTRON TUBES AND SEMICONDUCTORS

H & L ASSOCIATES
ELIZABETHPORT INDUSTRIAL PARK
ELIZABETH, NEW JERSEY 07206
(201) 351-4200

THE PRICE IS RIGHT AT NOVA

WE WILL MEET OR BEAT ANY DEAL
GALAXY — NATIONAL — DRAKE
HY-GAIN — SBE — MOSLEY
TRI-EX — ROHN

NOVA ELECTRONICS
3012 ROSS AVENUE, DALLAS, TEXAS 75204
Phone 214 824-4920

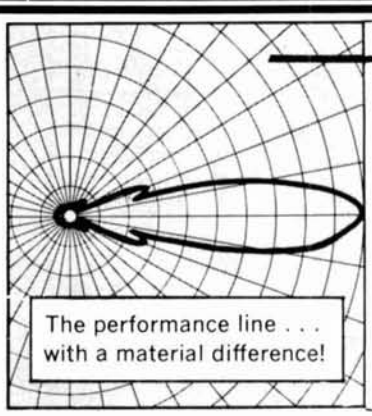

The performance line . . . with a material difference!

telrex

PREFERRED AND SPECIFIED WORLD-WIDE BY COMMUNICATION ENGINEERS AND ADVANCED AMATEURS

Don't settle for anything less than the very best! Use Telrex Communication products — for long lasting optimum performance and value!

FREE . . . Tech data and pricing catalogs describing off-the-shelf and custom-built antennas, systems, "Inverted-vee kits"®, towers, mono-poles and rotable "Berthas".

For commercial and military applications write for CM69 . . . for amateur applications write for PL69.

COMMUNICATION SYSTEMS SINCE 1921 — Communication Engineering — **telrex** Laboratories

ASBURY PARK, NEW JERSEY 07712, U.S.A.

REVIEWED IN MARCH, 1968 HAM RADIO

mark 2
oscillator/monitor

- makes an audible tone to monitor the RF of any CW transmitter from 10Mw to 1 Kw & 100Kc to 1000Mc, using only an 8" pickup antenna.
- can be self-triggered for code practice or the testing of solid state components and circuits.
- aids in tuning up & testing RF oscillator and power circuits.
- 4 transistor, 2 diode circuit, speaker, tone adjust, AA pencell, test leads, 8" ant., & magnetic base.
- cabinet is 16 gauge black & clear anodised aluminum, 3.4 x 2.3 x 1.2" US made & guaranteed for 1 year.

14.95 complete, ppd usa & can. send a check or m.o. sold by mail only

James Research company, dep't: HR-M
20 willits rd., glen cove, n.y. 11542

WORLD QSL BUREAU

5200 Panama Ave.
Richmond, Calif. U.S.A. 94804

PLAN 1

We forward your QSLs (please arrange alphabetically) to or within U. S. A., Canada and Mexico for 3¢ each, and to all other places in World for 4¢ each.

PLAN 2

You use our special log form and send us a copy. We supply QSL — make out QSL — deliver QSL, all for 8¢ each.

WRITE FOR FREE INFORMATION SHEET

SPACE AGE KEYER

Only $67.50

- Planar epitaxial *integrated circuits* for reliability. No tubes—No separate transistors.
- Precision feather-touch key *built-in.*
- *Fully digital—Dot-dash ratio always perfect.*
- No polarity problems—Floating contacts switch ±300-V @ 100-ma.
- Rugged solid construction—will not walk.
- Send QSL or postcard for free brochure.

PALOMAR ENGINEERS

BOX 455, ESCONDIDO, CAL. 92025

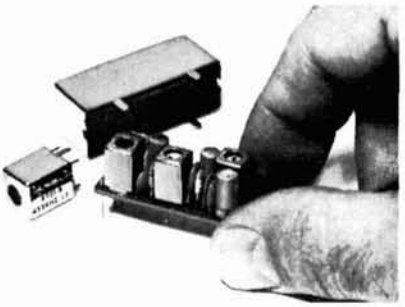

Pre-tuned solid state IF strip

Two-stage 455 kHz IF strip gives 8 kHz selectivity at 6 db when used with model 8901-B input IF transformer; can be used without input transformer when less selectivity is acceptable; gain 45-50 db.
IF Strip Dim.: .51" W x .55" H x 1.5" L
Input Tr. Dim.: 13/32" Sq. x 5/8" H
8902-B IF Strip @ $5.10.
8901-B Input Transformer @ $2.25
Both units $6.00 when ordered as kit 8903-B.

MILLER QUALITY PRODUCTS

J.W. MILLER CO.

19070 Reyes Ave. • P.O. Box 5825 Inf. 90003
Compton, Calif. 90224

AVAILABLE NATIONWIDE FROM DISTRIBUTORS AND MAIL ORDER HOUSES

radio amateur callbook

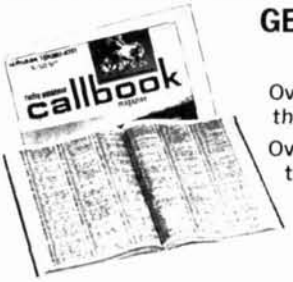

GET YOUR NEW ISSUES NOW!

Over 290,000 QTHs in the U.S. edition **$7.95**

Over 140,000 QTHs in the DX edition **$4.95**

NEW EDITION EVERY:
MARCH 1 — SEPT. 1
JUNE 1 — DEC. 1

These valuable EXTRA features included in both editions!

- QSL Managers Around the World!
- Census of Radio Amateurs throughout the world!
- Radio Amateurs' License Class!
- World Prefix Map!
- International Radio Amateur Prefixes
- Radio Amateurs' Prefixes by Countries!
- A.R.R.L. Phonetic Alphabet!
- *Where To Buy!*
- Great Circle Bearings!
- International Postal Information!
- Plus much more!

See your favorite dealer or order direct (add 25¢ for mailing in U.S., Possessions & Canada. Elsewhere add 50¢).

WRITE FOR FREE BROCHURE!

RADIO AMATEUR callbook INC.

Dept. E. 925 Sherwood Drive
Lake Bluff, Ill. 60044

VHF COMMUNICATIONS is the quarterly magazine for amateurs interested in VHF and UHF technology and equipment construction. It is the international, English edition of the well-known German publication UKW-BERICHTE.

VHF COMMUNICATIONS provides sixty pages of modern, but practical construction articles in each issue. Described are transmitters, receivers, converters, transceivers, antennas, test equipment, etc. The designs reflect truly current technology. Solid state devices and printed circuits are used extensively. All mechanical construction data are included. However, for the amateur without fabrication facilities, special components, such as p.c. boards and stripline cavities, are made available, readily and inexpensively.

Subscription rates US $3.00 ($4.00 air mail) per calendar year. Single issues $1.00.

VHF COMMUNICATIONS
TOPSFIELD, MASSACHUSETTS 01983

REVIEWED IN DECEMBER, 1968 HAM RADIO

the permaflex key

- both a twin lever & straight hand key in a pivotless 2 paddle design.
- gives instant choice of automatic semi-automatic & straight hand keying.
- use directly with any transmitter or through an electronic keyer.
- 8 amp. gold diffused silver contacts adjust from 0-.060" & 5-50 grams.
- distinctive blue paddles are of rugged G-10 fiberglass epoxy.
- cabinet is 16 gauge polished chrome steel: 1.95" sq. x 3.75", paddles extend 1.25", weight app. 1 pound.
- silicone rubber feet for stability.
- 100% US made & guaranteed for 1 yr.

19.95 complete, ppd usa & can. send a check or m.o. sold by mail only

James Research company, dep't: HR-K
20 willits rd., glen cove, n.y. 11542

Antennas Towers Rotators
New Used Surplus

We are a member of the Jennings Diode Bank.
Contact us for any diode.
Service ½ amp to 1000 amp any voltage.

HY GAIN · HUSTLER · MOSLEY · EZ WAY
TRI-EX · ROHN · VESTO · MYLAR
ROPE · CDR, Etc.

One piece or a complete antenna system
Also dealing in surplus
Write for latest catalog

ANTENNA MART
BOX 7 · RIPPEY, IOWA 50235

TAKE YOUR PICK

These units will replace the 100 kHz calibrator built into most receivers. Using your 100 kHz crystal this unit will provide sharp accurate markers with readouts at 100 - 50 - 25 - 10 and 5 kHz usable thru 50 MHz. Keep your receiver calibrated at all times, locate sub bands, MARS frequencies and band edges.

or

CIRCUIT BOARD

Glass epoxy board
Adjustment to zero beat with WWV
Uses 100 kHz crystal (not supplied)
3 to 4 VDC at approximately 75 ma — 2 "D" size batteries
Compact — 1.75 x 3.75 inches — Install anywhere
Complete easy-to-assemble kit $16.50 **Wired and Tested $19.95**
These prices postpaid USA less crystal & batteries

SELF-CONTAINED UNIT

The TBL 1 Marker is a complete unit including the circuit board shown at left and powered with 3 "C" type flashlight batteries. Merely connect to your receiver antenna — no internal wiring necessary. A front panel control allows zero beat with WWV.

Special introductory price
Less crystal and batteries $29.95
Add $1.00 postage and handling USA
SOLD WITH MONEY BACK GUARANTEE

THE RADIO SHOP, LAB 1
48 ELM STREET, NEW CANAAN, CONN. 06840 — Tel. 203-966-3553

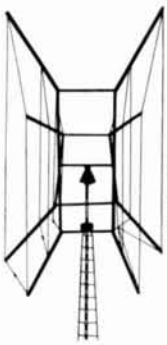

2 Element QUAD

FOR 10 - 15 - 20

The POPULAR 2 element Joga Quad for 10-15-20 now distributed state side for your convenience. Write for further information to:

GUARANTEE RADIO SUPPLY CORPORATION
1314 Iturbide St., Laredo, Texas Phone RA 3-6913

TEXAS TECHNICAL PRODUCTS
Route 2, Box 324-D , San Antonio, Texas 78228
Phone (512) 695-8430

PRODUCTOS **JOGA**

CALLE 50 X 45 NUM. 431
MERIDA, YUC., MEX.

LOW PRICE, QUALITY, COAXIAL SWITCHES . . .

Don't pay for the 5th and 6th position. The average HAM rarely uses more than 4!

SPECIFICATIONS: Silvered Contacts. Write-on ERASABLE escutcheon plate. AVAILABLE EITHER 4 PST (COAX-9) OR LINEAR (COAX-LINEAR) IN-OUT VERSION. Handles 1000 W AM or 2000 W SSB. Insertion loss negligible to 160 Mc. VSWR: Less than 1.2 at 160 Mc. Size: 3⅛" dia. x 1⅝" overall. Single hole mount. SPECIFY MODEL. $7.65 ea.

COAXIAL LIGHTNING ARRESTORS

Zero power loss. No increase in SWR at 150 Mc. Does not alternate signals. Model 210 for 1000 W (AM) or 2000 W (SSB). Model 211 Electronic static arrestor for 50 W (AM) or 100 W (SSB). SO-239 UHF type fittings. Other fittings available. Size approx. 3½" x ¾" dia. #210 $3.15 ea. #211 $4.65 ea. SPECIFY model #.

PRICES above are amateur net. Shipped ppd. in U.S.A. Send Check or M.O. (N.J. ADD 3% Sales Tax)

OTHER PRODUCTS: Feed thru capacitors. Tuned noise filters. Alternator, generator, low-pass and field filters. SEND FOR CATALOG.

"COMMUNICATION ENGINEERED"
By "HAMMIE" RICHARDT—W2WIY

ELECTRONIC APPLICATIONS CO.
ROUTE 46, Pine Brook, N. J. 07058

LIBERTY PAYS MORE!!

WILL BUY FOR CASH — ALL TYPES
Electron Tubes · Semiconductors · Test Equipment · Military Electronic Equipment

Wire, write, phone collect! We pay freight on all purchases!

LIBERTY ELECTRONICS, INC.
548 Broadway, New York, N. Y. 10012
Phone: 212/925-6000

Radio Amateurs Reference Library of Maps and Atlas

WORLD PREFIX MAP — Full color, 40" x 28", shows prefixes on each country . . . DX zones, time zones, cities, cross referenced tables . . . . . postpaid **$1.00**

RADIO AMATEURS GREAT CIRCLE CHART OF THE WORLD — from the center of the United States! Full color, 30" x 25", listing Great Circle bearings in degrees for six major U.S. cities; Boston, Washington, D.C., Miami, Seattle, San Francisco & Los Angeles. . . . . postpaid **$1.00**

RADIO AMATEURS MAP OF NORTH AMERICA! Full color, 30" x 25" — includes Central America and the Caribbean to the equator, showing call areas, zone boundaries, prefixes and time zones, FCC frequency chart, plus informative information on each of the 50 United States and other Countries . . . postpaid **$1.00**

WORLD ATLAS — Only atlas compiled for radio amateurs. Packed with world-wide information — includes 11 maps, in 4 colors with zone boundaries and country prefixes on each map. Also includes a polar projection map of the world plus a map of the Antarctica — a complete set of maps of the world. 20 pages, size 8¾" x 12" . . . . . postpaid **$2.00**

Complete reference library of maps — set of 4 as listed above . . . . . postpaid **$3.00**

See your favorite dealer or order direct.

WRITE FOR FREE BROCHURE!

RADIO AMATEUR **callbook** INC
Dept. E. 925 Sherwood Drive
Lake Bluff, Ill. 60044

NEW!

FMT-1
5 Watt 6 Channel
All Solid State 2 Meter
FM TRANSCEIVER

12-15 Volt Operation
142-149 MHz with 1 MHz maximum spread
Receiver sensitivity .3 microvolt for 20 db quieting
Dual Conversion
Mechanical Filter for sharp 28 KHz bandwith
5 watt RF minimum power output
6 Channels - One set crystals for operation 146.34-146.94 supplied
Adjustable 5 to 15 KHz deviation
Ready to operate - Just connect to 12 volts and an antenna

$289.95 FOB DENVER

— Certified Check or Money Order please —

Including mobile mount & dynamic microphone

Extra transmit or receive crystals $7.00 each order from

VHF Associates, Incorporated
P. O. BOX 22135, DENVER, COLO. 80222

"For that Personal Service and a Good Deal"
SEE AL
at Crabtree's Amateur Center in Dallas
FOR THE NEW GALAXY LINE

"HOT," Husky, and Handsome!

UP TO 90 DAYS SAME AS CASH IN OUR HOUSE — — —
OTHER ARRANGEMENTS AND TERMS AT THE LOWEST RATES.
WE NEED YOUR EQUIPMENT ON TRADES! MAIL ORDERS PROMPTLY FILLED.

CALL, COME SEE OR WRITE
AL MARKWARDT, W5PXH, MANAGER

CRABTREE'S AMATEUR CENTER
2608 ROSS AVE., DALLAS, TX. 75201, 748-5361

ELECTRONIC MAIL ADVERTISER

published by W ∅ Bargains Galore, is the fastest, most readable listing of electronic bargains. Twice a month, 7¢ a word, based on 2 insertions. For a free sample send your QTH to ELECTRONIC MAIL ADVERTISER, 1949 Van Reek Lane, St. Louis, Mo. 63131.

Q'5er

R11/ARC RECEIVER
See page 20 — August Ham Radio
Less tubes $6.95
With tubes $9.95
NEW $17.50

Arrow SALES, CHICAGO, INC.
ELECTRONIC DISTRIBUTORS
2508 SOUTH MICHIGAN AVENUE
CHICAGO, ILLINOIS 60616
312 CALUMET 5-4750

ANNOUNCING AN ALL NEW TRAP DIPOLE ANTENNA

COVERS ALL HF BANDS WITH REASONABLE SWR
ALL STAINLESS STEEL HARDWARE
HANDLES FULL LEGAL AMATEUR POWER

LENGTH APPROXIMATELY 104 FEET
SEALED PVC CONSTRUCTION
TRAPS MAY BE USED WITH OR WITHOUT BALUN — FOR BEST RESULTS THE BALUN IS RECOMMENDED

COMPLETE KIT
(except wire) includes all parts and detailed instructions
Only $23.95 ppd.

M. WEINSCHENKER K3DPJ
PO BOX 353, IRWIN, PA. 15642
Pa. Residents add 6% sales tax
DEALER INQUIRIES INVITED

AB-1 Balun only $10.95 ea. ppd.
ATH Traps only $13.95 per pair ppd.

CRYSTAL CALIBRATOR
100 KC to 25 KC

K100C-2 100 KC CRYSTAL CALIBRATOR. First P. C. board kit contains components for 100 KC output. The output of this little unit is really very stable, ± .005% or better at 100 KC. Voltage requirement is 4.5V DC (3 — 1½ V flashlight batt.). Complete with crystal, integrated circuits and all components.
ONLY $4.95

K100C-2A Contains two P. C. boards with components of Kit No. 1 and has additional components to deliver outputs of 50 KC & 25 KC band edge markers. Complete Kit K100C-2A will deliver stable harmonic-rich outputs of 100 KC, 50 KC, and 25 KC band edge markers. Units deliver a square wave which gives useful harmonics up to 50 MC.
ONLY $7.95

P. C. BOARD SUPPLIES

Etching Solution	99¢
Resist Paint	75¢
3″ x 6″ Copper board	35¢
4″ x 6″ Copper board	45¢

CONNECTOR SALE

PL259 ..... 45¢
10/$4.00 ..... 100/$37.50

M358	45¢	UG594A/U	75¢
SO239	45¢	M358	$1.95
UG88C/U	50¢	Double Male	95¢
PL258	85¢	UG657A/U	60¢
UG201/U BNC to Type N			95¢

SEND FOR OUR LATEST FLYER

INTEGRATED CIRCUITS

New straight from factory Fairchild I.C.'s UL 914 with 30 projects. Diagrams 80¢ ea., 10/$7.50 100/$65.00
UL 923 J.K. flip flop with spec. sheet. $1.50 ea. 10/$13.50 100/$110.00

STEREO HEADPHONES

High fidelity stereophonic headphone model SH-1 freq. range 25-15,000 C/S 8-16 ohm weight 350 gr. Retail price of these beauties $12.95
R & R price new $6.95

Two Locations

R & R ELECTRONICS
311 EAST SOUTH ST.
INDIANAPOLIS, IND.
46225
R & R ELECTRONICS
1953 S. Yellowsprings
SPRINGFIELD, OHIO
45506

Please refer all mail order to Ohio store.

NEED CRYSTALS?

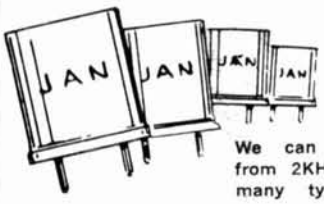

48 Hr. DELIVERY

We can supply crystals from 2KHz to 80 MHz in many types of holders.

SPECIALS

Color TV crystal (3578, 545KHz) wire leads	$1.60	4 for $5.00
100KHz frequency standard crystal (HC13/U)	4.50	
1000KHz frequency standard (HC6/U)	3.50	
Any CB crystal transmit or receive	2.25	
Any amateur band crystal (except 80 meters)	1.50	4 for $5.00
Any marine frequency (HC6/U)	2.85	
80 meter crystals in FT243 holders	2.50	

We have in stock over six million crystals which include types CR1A/AR, FT243, FT241, MC7, FT249, HC6/U, HC13/U, HC25/U, HC18/U, etc. Send 10¢ for our 1970 catalog with oscillator circuits, listing thousands of frequencies in stock for immediate delivery. (Add 10¢ per crystal to above prices for shipment 1st class mail, 15¢ each for air mail).

JAN CRYSTALS

Special Quantity Prices to Jobbers and Dealers.
ORDER DIRECT with check or money order to

2400 Crystal Drive
Fort Myers, Florida 33901

LATEST ARCTURUS SPECIALS

- **Color focus rectifiers, 14,000 P.I.V. at 1 MA, 99¢ each. 6.5 KV — 79¢.**
- **Color TV yokes 70° and 90° types. Fit almost all sets: $9.95 each.**
- **1700 Transistor types — 39¢ each.**
- **DS-501, 2N278 power transistor types. Cat. #349, 69¢ each.**
- **HEP170, Motorola HV/Current silicon rectifiers, 2.5 amps at 1,000 P.I.V., 49¢ each.**
- **Fully transistorized UHF tuners. Fit most sets. Cat. #UHF567. $4.95 ea.**
- **UHF tuners, 1 tube type. Fit most sets. Cat. #UHF3, $3.95 each.**

Complete listings of electronic items at similar bargain prices are available. Write for our latest catalog. Minimum order $5.00, plus postage.

ARCTURUS ELECTRONICS
CORP.

502-22nd ST., UNION CITY, N. J. 07087
Dept. HR
Phone 201 - UN 4-5568

W2AU BALUN LETS ENTIRE ANTENNA RADIATE!

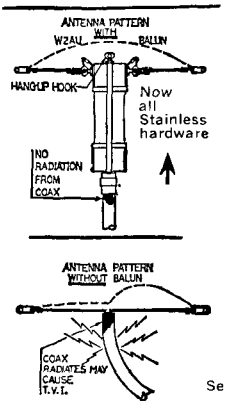

STOP WASTING YOUR SIGNAL! REMEMBER, YOUR ANTENNA IS THE MOST IMPORTANT PIECE OF GEAR YOU OWN.

- No Radiation from Coax
- No Center Insulator Needed
- Perfect for Inverted Vees (Use Hang-up Hook)
- Built-in Lightning arrester
- Broad Band 3 to 40 mc.
- Takes Legal Power Limit and then some
- Two Models:
  1:1 50 ohm coax to 50 ohm balanced
  4:1 75 ohm coax to 300 ohm balanced
- A must for Inverted Vees, Doublets, Quads, Yagis and Multiple Dipoles.

$12.95 AMATEUR NET

See QST and May 73 for more details

W2AU Complete pretuned Fiberglas Quad $99.95
W2AU Complete pretuned Vinyl Quad $64.95

UNADILLA RADIATION PRODUCTS
Unadilla, N. Y. 13849 607-369-2985

DIODES

PIV	TOP-HAT 1.5 AMP	EPOXY 1.5 AMP	EPOXY 3 AMP	STUD-MOUNT 6 AMP
50	.04	.06	.12	.15
100	.06	.08	.16	.20
200	.08	.10	.20	.25
400	.12	.14	.28	.50
600	.14	.16	.32	.58
800	.17	.20	.40	.65
1000	.20	.24	.48	.75

PRICES PPD. U. S. A.
PA. RESIDENTS ADD 6% PA. SALES TAX

M. WEINSCHENKER K3DPJ
PO BOX 353, IRWIN, PA. 15642

BARRY PAYS CASH FAST

You can be sure with Barry . . .
Fair dealing since 1938

Send lists of your unused TUBES, Receivers, Semi-Conductors, Vac. Variables, Test Equipment, etc.

No Quantity too Small.
No Quantity too Large.

Write or Call now . . . BARRY, W2LNI

BARRY ELECTRONICS
512 BROADWAY • NEW YORK, N. Y. 10012
212 - WA 5-7000

IN BUSINESS AGAIN
on a very restricted basis

R11A/ARC-5 ..... **$12.00 ea. with all tubes**
190 to 550 KC, receiver, Q-5er. Late type, with hi-Q, 85 KC IF. See August 1969 issue, **Ham Radio,** for solid state conversion. Very excellent used. **No front dial.** Internally complete. Shipping wt. 12 lbs. Price reduced. Less all tubes $10.00 each.

100 CFM BLOWER ..... **$6.50 each**
By **Howard Industries,** motor is 115v 60 cycle, .003 HP, 2½" x 2¾" x 1½" h. Cage 3¾" dia. 1½" h. Impeller (teflon) 1½" dia. 1" high. Output hole 1⅜" x 1¼". **New. 4 lbs.**

Heavily CHROME PLATED CABINETS Beautiful
All less chassis, and front and rear panels
6½" high, 6¼" deep, 2⅝" high, 3 lbs.
4/$3.00 79¢ each
7⅝" deep, 11¾" wide, 4⅜" high, 8 lbs.
4/$5.00 $1.29 each

RG-174/U, 50 OHM SUBMINIATURE CO-AX CABLE. Flexible
20 foot long, 6/$5.75 $1.00 each
4 foot long 5/$1.00 23¢ each

0-5 Amp. RF ..... **$4.50 each**
2½" rd. black figures, white background, w/thermocouple, new.

0-1.2 MA DC ..... **$2.00 each**
2½" rd. white figures, black background, take-outs. Excellent. Scale 0-100 linear. **6/$11.50**

B C Electronics

. . . NEW ADDRESS . . .
5696 NORTH RIDGE AVENUE
CHICAGO, ILLINOIS 60626
Ph. 334-4463, if no answer call 784-4426

. . . STORE HOURS . . .
Wed. and Sat. 10:00 a.m. to 3:00 p.m.
other times, by appointment only

Please, send all orders, correspondence, inquiries to 5058 N. Claremont Avenue, Chicago, Ill. 60625 — c/o Ben Cohn.

HAL DEVICES

A new concept in IC keyer design. You devise your own keyer, choose all the features you want, pay only for the features you order. Wired, tested, guaranteed to meet your specifications. Post paid.

The 25 keyer with 02 monitor, power supply and 364 cabinet.

- ☐ **25T Keyer.** . .8-50 wpm range, grid block keying (150v max), requires 3 vdc $13.00
- ☐ **25R Keyer.** . .25 Keyer with relay output, requires additional 12 vdc $14.00
- ☐ **04 Memory.** . .dot memory for 25 Keyer $ 3.00
- ☐ **10 Iambic.** . .squeeze keying for 25 Keyer $ 2.00
- ☐ **02 Monitor.** . .2¼" speaker, tone and volume controls, requires 3 vdc $ 4.00
- ☐ **364 Designer Cabinet.** . .all necessary hardware $ 5.00
- ☐ **Power Supply.** . . for 25 Keyer and/or monitor $ 8.00

HAL DEVICES

P.O. Box 365H
Urbana, Ill.
61801

ALSO AVAILABLE

- ☐ Fairchild 8 pin epoxy micrologic IC's, 900, 914 - 60¢ ea. 923 - 90¢ ea.
- ☐ Designer Cabinets — $2.85 to $5.95 write for details

VHF FM MONITOR RECEIVER

NEW

100% MADE IN U.S.A.

Only $69.95 Postpaid in the U.S.A.

The new **VANGUARD FMR-150** is not just another frequency converter but a complete FM receiver with outstanding performance.

Check the following features and see why it's the best. Collins IF filter for separating those closely spaced stations you hear together on other sets ● Double conversion to eliminate interference from image frequencies ● Dual Gate MOSFET RF stage for low noise, .2uv. sensitivity, and minimum cross modulation ● Automatic squelch for eliminating noise ● Self-contained speaker ● Operates on 12v. D.C. negative ground ● Heavy gauge anodized aluminum case 6" x 7" x 1⅜" ● Provision for 4 crystal controlled channels at the push of a button ● One channel of your choice supplied with receiver. Additional channels available just by plugging in another crystal at $4.95 ea. No need to buy another RF unit as in some other sets ● Factory tuned to cover any 6MHz segment from 135 to 175 MHz.

HOW TO ORDER: The **VANGUARD FMR-150** is available only direct from our factory. Include remittance in full plus sales tax if you reside in N. Y. Be sure to state the 6MHz segment you will want to cover and the exact push button frequencies to be included.

VANGUARD LABS Dept. R, 196-23 Jamaica Ave., Hollis, N. Y. 11423

DUAL TRANSISTOR IGNITION SYSTEM

This system was made by Canadian Tire to sell for $35.00. These are Brand New fully wired surplus, not rejects. The extra high voltage coil provides smoother running at high speeds and longer plug life, and the lower current through the points makes for longer point life and faster winter starts. Special connector allows instant change over to conventional ignition. Fully Guaranteed, with instructions ready to install for 6 or 12 volt negative ground car. CLOSE OUT SPECIAL
DTI ..... **$10.00 p.p.**

POOR MAN'S HI FI HEADPHONES

The Canadian Air Force has surplus also and we were fortunate to obtain over 500 headsets from them and are passing the savings on to you. They are unused and in the original cartons. The headphone elements are actually miniature speakers, as pictured, and this is the way Hi-Fi phones are constructed. Will give excellent fidelity with either voice or music. They have rubber pads with chamois-type covering, metal headband, cord and plug. 4 to 16 ohm impedance for use with any radio or TV, etc., by attaching to the speaker leads. May be converted to "stereo" by making connections at each ear phone. This is a real bargain for quality RCAF head sets.
RCAF HP ..... **$3.00 p.p.**

TELEGRAPHER'S TYPEWRITER

These Gov't surplus standard manual UNDERWOOD typewriters with 11" carriage will give your messages that authentic RTTY look. Last time we offered these, we were sold out in three weeks. Only 25 available. Pin feed type, but easily converted to regular type by changing roller. Mill key board in good condition.
Sh. Wt. 50 lbs. **UTT $29.50**

UNIVERSAL LOGIC CIRCUIT CARDS

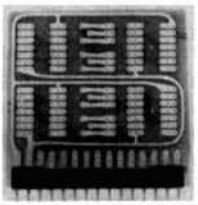

Instant logic!-!-! for 10 pin TO-5 or 14 lead dual in-line INTEGRATED CIRCUITS

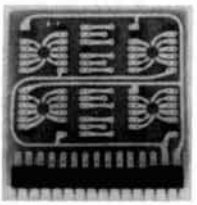

These boards are the most useful items we have ever offered for breadboarding with low cost integrated circuits. The cards are made from 1/16" G-10 Glass Epoxy, with pads for 14 lead dual in-line mounting pads on one side and 10 lead TO-5 pads on the other. 8 lead TO-5 cans will mount in the 10 lead TO-5 pads also. Discrete Transistors and components can be mounted in the locations between the I.C.'s, power supply leads are already routed around the board. Our competitors charge $9.50 each for circuit card and mating connector. We give you a surplus, unused p.c. board with components on it (that you can keep for your junk box), a connector and its mate, and our great circuit card. You drill out the desired hole pattern, unsolder the connector from the surplus card and install it on the new card, wire in the I.C.'s and compute. A few minutes of your time, and you save over 80% of the cost of comparable p.c. cards. Get enough for your breadboarding needs now because these are going to go fast.

2 Cards & mating connectors **2 ICCC $ 2.50 p.p.**
10 Cards & mating connectors **10 ICCC $10.00 p.p.**
100 Cards & mating connectors **100 ICCC $88.00 p.p.**

GOV'T SURPLUS — EQUIPMENT CASES

Cast Aluminum case with handle and rubber feet. Threaded bosses inside provides means of fastening items. Toggle clamps provided for ease of opening case. This rugged military case measures 13" x 12" x 9" deep. This case will give that professional look to your projects. This case will scrap out at over $5.00 and cost over $80.00 to manufacture. **Qty. Ltd.**
Sh. Wt. 30 lbs. **GSEC $9.50**

SEND 25¢ FOR OUR LATEST, BEST CATALOG YET, JAM PACKED WITH ELECTRONIC BARGAINS . . . FREE WITH AN ORDER . . .

B F Enterprises

P. O. BOX 44, HATHORNE, MASS. 01937

REGUL. PWR SPLY FOR COMMAND, LM, ETC.:

PP-106/U: Metered. Knob-adjustable 90-270 v up to 80 ma dc; also select an AC of 6.3 v 5A, or 12.6 v 2 1/2 A or 28 v 2 1/2 A. With mating output plug & all tech. data. Shpg wt 5#..... **19.50**

BARGAINS WHICH THE ABOVE WILL POWER:

LM-(*) Freq. Meter: .125-20 MHz, .01%, CW or AM, with serial-matched calib. book, tech data, mating plug. Checked & grtd. 57.50
TS-323 Freq. Meter: Similar to above but 20-480 MHz, .001%. With data 169.50
TS-175 Freq. Meter: 85-1000 MHz 75.00
A.R.C. R11A: Modern Q-5'er 190-550 KHz 12.95
A.R.C. R22: 540-1600 KHz w/tuning graph 17.95
A.R.C. R13B: 108-132 MHz w/tuning graph 27.50

HI-SENSITIVITY UHF RECEIVER:

375-1000 MHz. Stoddart RFI Meter NM-50A with pwr sply, cords, dipole holder, 3 pair dipoles. Input 50 ohms. IF 60 MHz. Bandwidth 1 MHz at 370 and 1.8 at 1 ghz RF. Image & spurious-response reject. better than 40 db. Sensit. as a 2-terminal tuned voltmeter is 10 uv; will be less with 1-pair dipole, but you can make an array to bring it up. If the voltage-attenuation calib. charts didn't get lost it would be worth $1250 in surplus, $2852 from the factory . . . so we will sell it as a simple receiver in grtd-excel. condition for only . **275.00**

ULTRA-WIDE-BAND RECEIVER:

AN/ALR-5: Late postwar AM/FM Countermeasures rcvr. Has S-Meter; variable IF Atten. & passband (0.2 or 2 MHz from 30 MHz center); AF. Video & Pan. outputs. New, modified for 120 v 60 Hz. Includes new (Method II pack) 4-band plug-in converter .038-1 GHz. 4 Type-N plugs automatically select correct ant. as bands are switched. Sensit. at -6 db setting: 6 1/2 uv thru 132 MHz. 13 thru 780 MHz & 45 1/2 at 1 GHz. BRAND NEW, with book & mating pwr-input plug, only 275.00

Versatile Plate & Filam. Transformer:

Depot Spares for SP-600-JX: Pri. 95/105/117/130/190/210/234/260 v 50/60 Hz. Sec. 1: 305-0-305 v, 150 ma. Sec. 2: 5 v 3A. Sec. 3: 6.3 v 5 A. Sec. 4: 7 1/2 v, 3/4 A. Sec. 5: 7 1/2 v, 1 1/4 A. Legend for pins is plainly marked. Herm. sealed.. 2.95

FOUND! A NEAT & COMPACT SCOPE XFRMR!

Freed 12691: DAS Loran Spares, supplied 5" CR, plates & htrs. Pri. 105-130v 50/60Hz. Sec's insul. 5 kv: 1490 & 1100 v, 5 ma; 390-0-390 v 100 ma; electrostatically-shielded 6.3 v, 0.8 A; two 2 1/2 v, 2 A. Sec's insul. 1 1/2 kv: two 6.3 v, 6 A; 5 v, 3 A; 2 1/2 v, 5A. Case 5 1/4 x 5 x 7 1/4. With diagram. Shipped only by collect REA Express..... **2.95**

FAIRCHILD SOLID-STATE SCOPES all w/dual-trace plug-ins 25 & 50 MHz, w/delayed time-base plug-ins, w/books, overhauled & grtd. As low as **825.00**

WE PROBABLY HAVE THE BEST INVENTORY OF GOOD LAB TEST EQUIPMENT IN THE COUNTRY, BUT PLEASE DO NOT ASK FOR CATALOG! ASK FOR SPECIFIC ITEMS OR KINDS OF ITEMS YOU NEED! WE ALSO BUY! WHAT DO YOU HAVE?

R. E. GOODHEART CO. INC.
Box 1220-HR, Beverly Hills, Calif. 90213
Tel: Area 213, office 272-5707, messages 275-5342

Buy - Sell - Trade

MILITARY SURPLUS TEST EQUIPMENT

SG-1A/ARN, SG-2/GRM-4, SG-13/ARN, SG-66/ARM-5, MD-83A/ARN, H.P. 606A, H.P. 608D, H.P. 612A, H.P. 618D, TRM-1, ARC H-14A, COLLINS 479T-2, 479S-3. NEW HAM GEAR TO TRADE OR CASH TO BUY. WRITE, WIRE, PHONE (813) 722-1843, BILL SLEP, SLEP ELECTRONICS COMPANY, 2412 HIGHWAY 301N, ELLENTON, FLORIDA 33532.

SLEP ELECTRONICS CO.
2412 NORTH HIGHWAY 301 N. ELLENTON, FLORIDA 33532
PHONE (813) 722-1843

radio amateur callbook

Radio Amateur Emblems engraved with your call letters.

Charm

☐ Gold
☐ Rhodium
call letters
$5.00 Ea.

Tie Bar

☐ Gold
☐ Rhodium
call letters
$5.00 Ea.

All illustrations are actual size.

Lapel Pin

☐ Gold
☐ Rhodium
call letters
$5.00 Ea.

***Rush Order To:* RADIO AMATEUR CALLBOOK, Inc.**
Dept. E. 925 Sherwood Drive, Lake Bluff, Ill. 60044

MIDLAND SWR AND POWER METER

Reads output and reflected power simultaneously. May be left in line up to 2000 watts. Low insertion loss. Size 5x2x2. Good to 175 Mhz. **PRICE $15.95, FOB HOUSTON.**

MADISON ELECTRONICS SUPPLY
1508 McKINNEY — HOUSTON, TEXAS 77002
(713) 224-2668

ALL BAND TRAP ANTENNA !

Reduces Interference and Noise on ALL Makes Short Wave Receivers. Makes World-Wide Reception Stronger. Complete with 96 ft. 72 ohm feedline. Sealed resonant traps. For **novice and class radio amateurs!** Eliminates 5 separate antennas with better performance guaranteed. 80-40-20-10 meter bands. Complete 102 ft. **$19.95.** 40-20-15-10 meter bands, 54 ft. (best for world-wide short wave reception) **$18.95. Send only $3.00** (cash, ck., mo) and pay postman balance COD plus postage on arrival or send full price for postpaid delivery. Complete instructions included!
WESTERN ELECTRONICS . Dept. B . Kearney, Nebr. 68847

WE PAY CASH FOR TUBES
LEWISPAUL ELECTRONICS INC.
303 W. Crescent Avenue
Allendale, New Jersey 07401

WIRELESS ELECTRONIC TACH

Portable transistorized, wireless (no connections required). May be used on 2 or 4 cycle engines, 1-2-4-6 or 8 cylinder, outboards, marine, autos, trucks. 2 scales 6,000 & 12,000 rpm.

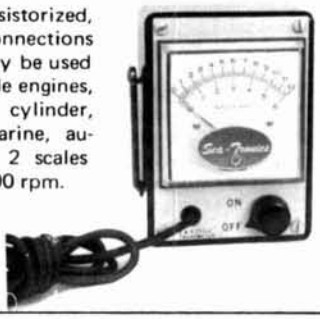

$20.

$6,400.00 MEMORY DRUM

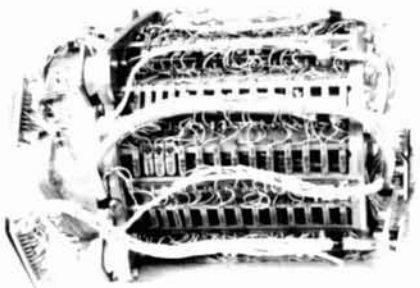

Military surplus made by HUGHES for the AF. Condition appears excellent due to being enclosed in air tight case with terminations on plug connections. 134 read/write heads, 12 heads phase adjustable timing. Integral drive-motor 115 volts 400 cycle.

Shipping wt. 39 lbs. . . . . #DRUM $100.00

INTEGRATED CIRCUITS

900	Buffer	$1.00
910	Dual 2-input NOR	1.00
2-903	Dual input gate	1.00
914	Dual 2-input gate	1.00
914-925	Dual 2-input gate dual expander	1.00
923	JK flip flop	1.00
925	Dual 2-input gate exp	1.00
946	DTL 4 2-input NAND/NOR gate	2/1.00
	DTL Clocked flip flop	2/1.00
1M5	Dual 4-input logic gate	2/1.00
7M6	6 NPN transistors in one package, gen use	3/1.00
12M2	Diff Amp	1.00
711	Dual Comp Amp	2.00

JOHN MESHNA JR.

19 ALLERTON ST., LYNN, MASS. 01904
P. O. BOX 62, E. LYNN, MASS. 01904

COMPUTOR GRADE CAPACITORS

15 volt 110,000 mfd	$2.00 ea.	12/$20
18 volt 6,500 mfd	1.00	12/$10
50 volt 4,000 mfd	1.00	12/$10
450 volt 600 mfd	2.00	12/$20

VARIABLE DISC TRIMMER

Miniature ceramic variable trimmer capacitor. Piston type tuning, size .375 diam, .275 deep. Printed circuit mount. Amateur net on this is $1.68 each. Our price only 25¢ each or 24 for $5.00. All are brand new. State size, may be assorted if you wish.

#N300 2.5-11 pf
#NPO 5.5-18 pf
#N650 9-35 pf

0.5 mfd 7,500 Volt

Brand new Military surplus oil filled transmitting cap. Ceramic standoffs.
5 lbs. . . . . #69-210 $5.00

H. V. CAPACITOR

GE oil filled capacitor, A real brute, rated 1 mfd at 15,000 volts. Terrific savings due to being Govt. surplus.
30 lbs. . . . . #69-63 $10.00

"IF" TRANSFORMERS

262.5 khz tube, Miller type 6572
262.5 khz transistor, Miller type 8008
10.7 mhz tube, Miller type 1463
10.7 mhz transistor, Miller type FM-IF

The above 6/$1.00 36/$5.00

ABSOLUTELY

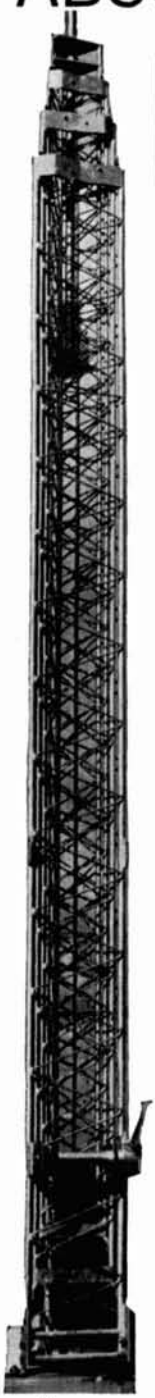

NEW

TRI-EX

W-67

FREE STANDING TOWER.

SUPPORTS 9 SQ. FT. OF ANTENNA.

Shown with internal Ham M rotator and 2" mast.

INCLUDES

- **FREE: RIGID BASE MOUNT**
- **PRE-DRILLED TOP PLATE — For TB-2 thrust bearing.**
- **HIGH STRENGTH STEEL TUBING LEGS. Solid rod, "W" bracing.**
- **EASY MAINTENANCE — *No guys or house brackets needed.***
- **RISES TO 67 FT. — Nests down to 22 ft.**
- **HOT DIPPED GALVANIZED AFTER FABRICATION! All welding by certified welders.**

IMMEDIATE DELIVERY

FREIGHT PREPAID INSIDE CONTINENTAL U.S.A.

Tri-Ex TOWER CORPORATION

7182 Rasmussen Ave., Visalia, Calif. 93277

Advertisers Index

Aerotron	84
Antenna Mart	87
Antennas, Inc.	15
Arcturus Electronics Corp.	90
Arrow Sales — Chicago, Inc.	89
BC Electronics	91
B & F Enterprises	93
Barry Electronics	91
Bob's Amateur Electronics	80
Collins Radio Co.	Cover II
Crabtree Amateur Center	89
Dames Co., Theodore E.	82
Drake Co., R. L.	2
East Texas Photocopy Co., Inc.	84
Eimac Division of Varian	1
Electronic Applications Co.	88
Electronic Mail Advertiser	89
Galaxy Electronics	5, 79
Goodheart Co., Inc., R. E.	94
Gordon Co., Herbert W.	Cover III
H & L Associates	85
HAL Devices	92
Hafstrom Technical Products	85
Ham Radio Magazine	42
Hammarlund Manufacturing Co.	51
Henry Radio	61
International Crystal Manufacturing Co.	71
James Research	86, 87
Jan Crystals	90
Joga, Productos	88
Lewispaul Electronics, Inc.	94
Liberty Electronics	88
Madison Electronics Supply	94
Meshna, John, Jr.	95
Miller Co., J. W.	86
National Radio Co., Inc.	43
Nova Electronics	85
Palomar Engineers	86
R & R Electronics	90
RCA Institutes	11
Radio Amateur Callbook, Inc.	86, 88, 94
Radio Shop, Lab 1	87
Sams & Co., Inc., Howard W.	67
Signal/One	83
Slep Electronics	94
Spectronics	57
Spectrum International	85
Stellar Industries	75
Structural Glass, Ltd.	80
Swan Electronics	Cover IV
Telrex Communication Engineering Laboratory	85
Tri-Ex Tower Co.	96
Unadilla Radiation Products	91
VHF Associates	88
VHF Communication	87
Vanguard Labs	92
Varitronics, Inc.	19
W3KT	80
Weinschenker	89, 91
Western Electronics	94
World QSL Bureau	86

A

DIFFERENT

KIND OF TOWER!

To one not familiar with the products of the Heights Manufacturing Co. this may sound like little but sales talk. A look at these most interesting towers, however, will quickly dispel any notion that the Heights Tower is like any other and will clearly demonstrate that here is a product which offers some unique and very desirable features.

These towers are constructed of aluminum, thus, offering a lightweight, maintenance free design. Like most of the antennas you might put on these towers they never need painting or any similar type of protection. This means that your investment is far better protected. A Heights Tower will look like new many years after installation.

This lightweight design makes these towers much easier to handle With the Heights fold over design one man can easily raise and lower a complete tower including the antennas by himself. And he can do all of this standing on the ground. There is no need to climb a Heights Tower (or to have to hire someone to do it for you). This makes it much easier for you to adjust or repair existing antennas or to install a new one. In fact, one man can make the complete tower installation by himself.

The Heights Tower has been designed to be used without any wires or other supports. Thus, you can eliminate many of the problems normally encountered in this area and at the same time further speed and simplify your tower installation.

Many sizes of these towers are available for heights up to 120 feet and for wind loadings as great as 26 square feet at 80 M.P.H. Accessories are also available to permit their use in a maximum variety of installations.

We stock several designs of these wonderful towers and are able to provide delivery of other models in a very short time. Write for a complete catalog on these excellent products or better yet let us quote on one of these fine towers for your antenna installation.

HERBERT W. GORDON COMPANY

Harvard, Massachusetts 01451 • Telephone 617 — 456 — 3548

"Helping Hams to Help Themselves"

INTRODUCING THE

DELUXE SWAN *Cygnet*

MODEL 270 . . . 5 BANDS . . . 260 WATTS

The deluxe Cygnet is a complete amateur radio station including AC and DC power supply and loudspeaker, beautifully integrated into one package. It contains all the features required for home station operation with enough power to work the world. Yet the 270 is compact and light enough to make an ideal 'traveling companion' on those business or vacation trips (second only to the XYL, of course). Incidentally, a carrying case for the Cygnet will soon be available.

For temporary mobile installation, either in your own or someone else's car, Swan will soon offer an installation kit, including antenna, which will put you on the air in 5 minutes (no holes). Thus, you'll be able to operate mobile from a rental car! For permanent mobile installation, your Swan dealer has mounting kits and 5 band antennas in stock.

For those who feel they need higher power to climb above the QRM level, Swan will soon announce a matching 1 KW Cygnet Linear. It will also come with a handle just in case you decide to take its 25 pounds along on a trip. With this much power of course, it works only on AC.

SPECIFICATIONS: **Power Input:** 260 watts P.E.P. in SSB voice mode, and 180 watts in CW mode ● **Frequency Range:** 3.5-4.0 mc, 7.0-7.3 mc, 14.0-14.35 mc, 21.0-21.45 mc, 28.0-29.7 mc ● **C.F. Networks:** Crystal Lattice Filter. Same as used in the Swan 500 C. 2.7 kc band width at 6 db down. 4.6 kc wide at 60 db down. Ultimate rejection exceeds 100db ● **Unwanted** sideband suppressed. 50 db. **Carrier** suppressed 60 db. 3rd order distortion down approx. 30 db ● **Audio Response:** flat within 3 db from 300 to 3000 cycles in both transmit and receive modes ● **Pi Antenna coupler** for 52 or 75 ohm coaxial cable ● **Grid Block CW keying** with off-set transmit frequency ● **Solid state VFO circuit** temperature and voltage stabilized ● **Receiver sensitivity** better than ½ microvolt at 50 ohms for signal-plus-noise to noise ratio of 10 db ● **100 kc Crystal Calibrator** and dial-set control ● **S-meter** for receiver, P.A. Cathode meter for transmitter tuning ● **Improved** AGC and ALC circuit. Separate **R.F.** and **A.F.** gain controls ● **Sideband selector** ● Provision for **plug in of VOX** accessory, as well as headphones and/or Cygnet Linear ● **Tube complement:** 12BA6 VFO amp, 12BE6 trans. mixer, 6GK6 driver, 6LQ6 pwr. amp., 6BZ6 rec. R.F., 12BE6 rec. mixer, 12BA6 1st I.F. amp., 12BA6 2nd I.F. amp., 12AX7 prod. det. A.F. amp., 6AQ5 A.F. output, 12AX7 mic. amp., 6JH8 bal. mod., 12AV6 AGC-ALC amp. **Dimensions:** 5½ in. high, 13 in. wide, 11 in. deep. Weight: 24 pounds.

Amateur Net: **$525**

See the Swan 270 at your Swan dealer

ACCESSORIES

Mobile Mounting Kit		$12
VX-2 Plug-in VOX Unit		35
5 Band Mobile Antennas	Model 45	65
	Model 55	95

SWAN ELECTRONICS

OCEANSIDE, CALIFORNIA • A subsidiary of Cubic Corporation